Thermo Fisher Scientific

1100 °C Box Furnace
BF51800 Series

Installation and Operational Manual

312060H01

01/2012

Part of Thermo Fisher Scientific

Thermo SCIENTIFIC

© 2011 Thermo Fisher Scientific Inc. All rights reserved.
These operating instructions are protected by copyright. Rights resulting thereof, particularly reprint, photomechanical or digital postprocessing or reproduction, even in part, are only allowed with the written consent of Thermo Fisher Scientific.
This regulation does not apply to reproductions for in-plant use.
The contents of this operating instructions manual may change at any time and without any prior notice.
Concerning translations into foreign languages, the English version of these operating instructions is binding.

Trademarks
Linderberg/Blue M is a brand owned by Thermo Fisher Scientific Inc.
All other trademarks mentioned in the operating instructions are the exclusive property of the respective manufacturers.

Thermo Electron LED GmbH
Robert-Bosch-Straße 1
D - 63505 Langenselbold
Germany

Thermo Electron LED GmbH is an affiliate to:
Thermo Fisher Scientific Inc.
81 Wyman Street
Waltham, MA 02454
USA

Thermo Fisher Scientific Inc. provides this document to its customers with a product purchase to use in the product operation. This document is copyright protected. and any reproduction of the whole or any part of this document is strictly prohibited, except with the written authorization of Thermo Fisher Scientific Inc.
The contents of this document are subject to change without notice.
All technical information in this document is for reference purposes only. System configurations and specifications in this document supersede all previous information received by the purchaser.
Thermo Fisher Scientific Inc. makes no representations that this document is complete, accurate or error-free and assumes no responsibility and will not be liable for any errors, omissions, damage or loss that might result from any use of this document, even if the information in the document is followed properly.
This document is not part of any sales contract between Thermo Fisher Scientific Inc. and a purchaser.
This document shall in no way govern or modify any Terms and Conditions of Sale, which Terms and Conditions of Sale shall govern all conflicting information between the two documents.

Table of Contents

Chapter 1 Safety Notes
Basic Operating Precautions 1-1
Safety Consideration. 1-2
Warranty 1-4
Material Safety Data Sheet 1-4
Explanation of Safety Information and Symbols 1-11
Additional Symbols for Safety Information 1-11
Standards and Directives 1-12

Chapter 2 Introduction
Feature and Benefits. 2-1
Specifications. 2-2

Chapter 3 Pre-Installation
Unpacking 3-1
Operating Condition 3-1
Atmosphere System 3-1

Chapter 4 Installation
Location. 4-1
Wiring. 4-1
240 VAC Operation 4-2
BF51828C Models 4-3
Exhaust Vent 4-4
Exhaust Port Connection 4-5
Atmosphere Inlet 4-6
Atmosphere Inlet Port 4-6
Hearth Plate Information 4-7
Guidelines for Ashing Application 4-7

Chapter 5 Start Up
Furnaces Start-up 5-2
Door Seal Check 5-3
Door Seal Adjustment 5-3
Door Latch Plate Adjustment 5-5
UP150 Controller Operation 5-6
Ramp to 200 °C 5-7
Ramp to 500 °C 5-9
Ramp to 1000 °C And Operating for 2 hours 5-10

Chapter 6 UP150 Control Overview
UP150 Control Overview 6-2
Single Setpoint Operation. 6-7
Programming operation: Entering a Program 6-9
Using Hold Function 6-14
Using Advance Function 6-14

Auto Tuning through UP150 Controller 6-15
Temperature Offset Procedure..... 6-16
Changing Temperature Scale Between °C and °F..... 6-17

Chapter 7 Communication
Cable Installation..... 7-1
Communication Setup Parameter. 7-1
Software Installation..... 7-2
Communication test..... 7-3
Troubleshooting..... 7-4
Decimal Point Adjustment 7-4
Addresses for Multiple Controllers 7-4

Chapter 8 Maintenance
Door Seal Adjustment. 8-2
Thermocouple Replacement. 8-2
Solid State Relay Replacement..... 8-4
Power Relay Replacement..... 8-5
Temperature Controller Replacement..... 8-5
Door Insulation Replacement. 8-6
Heating Unit Replacement. 8-7

Chapter 9 Troubleshooting 9-1

Chapter 10 Wiring Diagram. 10-1

Chapter 11 Replacement Parts 11-1

Chapter 12 Error Codes 12-1

Chapter 13 WEEE Compliance..... 13-1

Chapter 14 Spare Parts and Accessories 14-1

Chapter 15 Device Log..... 15-1

Chapter 16 Contact 16-1

List of Figures

Figure 1	1100°C Box Furnace	2-1
Figure 2	Thermocouple	4-2
Figure 3	Exhaust Vent	4-5
Figure 4	Preventing Chimney Effect	4-5
Figure 5	Gas Inlet Tube Assembly	4-6
Figure 6	Hearth Plate Concave and Grooved	4-7
Figure 7	UP150 Control Display	6-1
Figure 8	Ramp and Dwell graph	6-12
Figure 9	Thermocouple Replacement	8-3
Figure 10	Solid Relay Replacement	8-4
Figure 11	Door Insulation and Frame assembly	8-7
Figure 12	Heating Unit Replacement	8-9
Figure 13	Alignment of Insulation and Cabinet Front Frame	8-10
Figure 14	Wiring Diagram (Sheet 1 of 3)	10-2
Figure 14	Wiring Diagram (Sheet 2 of 3)	10-3
Figure 14	Wiring Diagram (Sheet 3 of 3)	10-4

Safety Notes

Basic Operating Precautions

These operating instructions describe 1100 °C Box Furnaces.

1100 °C Box Furnaces have been manufactured to the latest state of the art and have been tested thoroughly for flawless functioning prior to shipping. However, the Box may present potential hazards, particularly if it is operated by inadequately trained personnel or if it is not used in accordance with the intended purpose. Therefore, the following must be observed for the sake of accident prevention:

- 1100 °C Box Furnaces must be operated by adequately trained and authorized professional personnel.
- 1100 °C Box Furnaces must not be operated unless these operating instructions have been fully read and understood.
- The present operating instructions, applicable safety data sheets, plant hygiene guidelines and the corresponding technical rules issued by the operator shall be used to create written procedures targeted at personnel working with the subject matter device, detailing:
  - The decontamination measures to be employed for the Box Furnace and the accessories used with it.
  - The safety precautions to be taken when processing specific agents.
  - The measures to be taken in case of accidents.
- Repair work on the Box must be carried out only by trained and authorized expert personnel.
- The contents of these operating instructions are subject to change at any time without further notice.
- Concerning translations into foreign languages, the English version of these operating instructions is binding.
- Keep these operating instructions close to the furnace so that safety instructions and important information are always accessible.
- Should you encounter problems that are not detailed adequately in these operating instructions, please contact Thermo Fisher Scientific immediately for your own safety.

Safety Considerations

DANGER

Do not modify or use equipment in a manner other than expressly Intended. Modification of equipment other than that for which it is explicitly designed could cause severe injury or death. Any customer after-market retrofit violates the warranty of the equipment.

Do not modify or disconnect any safety features provided. Disconnection of the unit safety features could allow the unit to become overheated and start on fire, causing personal injury or death, product and property damage.

Do not use components or materials not specifically designed for this equipment. Failure to comply with this precaution could result in damage to equipment used or the furnace and may create an overheat situation. Also, do not use anything other than OEM exact replacement equipment and parts. Not using OEM replacement parts could cause faulty. Instrumentation readings, inoperable equipment, or temperature overshoot. Both situations may cause personal injury or death, product, and property damage.

Before using, user shall determine the suitability and integrity of the product for the intended use and that the unit has not been altered in any way. Misapplication may compromise the safety of the end user or the life of the product.

CAUTION

This product contains refractory ceramic fiber which can result in the following:

- May be irritating to skin, eyes, and respiratory tract.
- May be harmful if inhaled.
- May contain or form cristobalite (crystalline silica) with use at high temperature (above 871 °C) which can cause severe respiratory disease.
- Possible cancer hazard based on tests with laboratory animals. Animal studies to date are inconclusive. No human exposure studies with this product have been reported.

		WARNING Before maintaining this equipment, read the applicable MSDS (Material Safety Data Sheets) in the safety notes of this manual.

		WARNING • Keep personnel not involved in the installation out of the area. • Use a good vacuum to clean area and equipment. Use a dust suppressant if sweeping is necessary. Do not use compressed air. • Use a disposable mask suitable for nuisance dust. • Wear long sleeve clothing, gloves, hat, and eye protection to minimize skin and eye contact. Do not wear contact lenses. • Thoroughly wash self after work is complete. • Launder work clothing separate from other clothes and thoroughly clean laundering equipment after use. If clothing contains a large amount of dust and/or fiber, dispose of rather than clean. • Promptly place used ceramic fiber parts and dust in plastic bags and dispose of properly.

Warranty

Thermo Fisher Scientific warrants the operational safety and functions of the Laboratory Box Furnaces only under the condition that:

- The Laboratory Box is operated and serviced exclusively in accordance with its intended purpose and as described in these operating instructions,
- The Laboratory Box is not modified,
- Only original spare parts and accessories that have been approved by Thermo Scientific are used (third-party spares without Thermo Scientific approval void the limited warranty),
- Inspections and maintenance are performed at the specified intervals,
- An operation verification test is performed after each repair activity.

The warranty is valid from the date of delivery of the Laboratory Box to the customer.

Material Safety Data Sheet

PRODUCT IDENTIFICATION

Trade Name:	MOLDATHERM		
Generic Name:	Refractory Ceramic Fiber Insulation	Manufacturer:	Rex Rota Corporation
		Address:	P.O. Box 980 Fowlerville. MI 48836
Chemical Name:	N/A (Mixture)		
CAS#:	None Assigned	Telephone:	517/223-3787

II. PRODUCT HAZARD SUMMARY

Health	WARNING May be harmful if inhaled. May be irritating to the skin, eyes and respiratory tract. possible cancer hazard based on test with laboratory animals.
Flammability:	Non - Combustible
Reactivity:	Stable

III. HEALTH HAZARDS A. SIGNS/SYMPTOMS OF OVEREXPOSURE

Ingestion:	May cause gastrointestinal disturbances such as irritation, nausea, vomiting and diarrhea.
Eyes:	Slightly to moderately irritating. Abrasive action may cause damage to the outer surface· of the eye.
Skin:	Slight to moderate irritation or rash. Irritation is due to mechanical reaction to sharp, broken ends of fibers.
Inhalation:	May cause irritation or soreness of throat and nose. Extreme exposure may produce coughing, congestion, and even difficulty breathing. Pre-existing medical conditions may be aggravated by exposure: e.g. bronchitis, emphysema, and asthma.

III. HEALTH HAZARDS B. FIRST AID

Ingestion:	Do not induce vomiting. Get medical attention if irritation persists.
Skin:	Wash affected areas gently with soap and water. Do not rub or scratch exposed skin. Using a skin cream or lotion may be helpful. Get medical attention if irritation persists.
Eyes:	Flush immediately with large amounts of water. Do not rub eyes. Get medical attention if irritation persists.
Inhalation:	Remove affected person from source of exposure. Drink water to clear throat, and blow nose to expel mist/dust. Avoid tobacco smoke. Get medical attention if irritation persists.

III. HEALTH HAZARDS C. SUMMARY / RISKS

At this time there are no known published reports that demonstrate an associated association between RCF exposure and respiratory disease. The following is a review of the result date:

1. There is no evidence of any fibrotic lung disease (interstitial fibrosis) whatsoever on x-ray.
2. There is no evidence of elevated lung disease among those employees exposed to RCF that had never smoked.
3. A statistical "trend” was observed in the exposed population between the duration of exposure to RCF and a decrease in some measures of pulmonary function. These observations are clinically insignificant. In other words, if these observations were made on an individual employee, the results would be interpreted as being within the normal range.
4. Pleural plaques (thickening along the chest wall) have been observed in a small number of employees who had a long duration of employment. There are several occupational and non-occupational causes for pleural plaque. It should be noted that plaques are not associated with any measurable effect on lung function.

A number of studies on health effects of inhalation exposure of rats and hamsters, have been completed. Rats exposed to doses corresponding to 200 f/cc developed progressive lung damage (interstitial fibrosis) and cancers of the lung and of the pleura (lining of the chest wall and lung). Hamsters similarly exposed developed interstitial fibrosis and pleural cancer, but no lung cancer.

In a multiple dose study in rats, statistically significant increases in lung tumors were observed following exposure to the highest doses; there were no excess lung cancers at lower doses.

As a result, the International Agency for Research on Cancer (IARC) has classified RCF, along with fibrous glasswool and mineral wool, as possible human carcinognes (Group 2B) based on sufficient evidence of carcinogenicity in animals but insufficient data in humans. IARC has also classified respirable crystalline silica, which may be found in after- service RCF exposed to temperatures above 1800 °F, as a known carcinogen to humans (Group 1). See Section IX for additional information concerning after service RCF.

IV. PERSONAL PROTECTION

Eye Protection:	Safety glasses with side shields or goggles are recommended, particularly when working overhead. Do not wear contact lenses.
Skin Protection:	Wear gloves, hats, or loose fitting full body clothing as required to prevent skin irritation. Wash exposed areas with soap and warm water after handling. Wash work clothes separately from other clothing. Rinse washing machine thoroughly after use.

Respiratory Protection:	Use mechanical ventilation with proper dust collection equipment to keep the dust level below the exposure limits listed in the Ingredients/Health Hazard Information section. Use NIOSH or MSHA approved equipment when airborne exposure limits are exceeded. Acceptable respirators recommended for various repairable fiber concentrations are:
Concentration	Respirator Type
.5-5 f/cc	Half-face, tight fitting respirator with HEPA filter cartridges. (Example: 3M 6340)
5-25 f/cc	Tight fitting, full face air purifying respirator with HEPA filter cartridges or powered air-purifying respirator (PAPR) equipped with HEPA filter cartridges (Example: 3M 7800 with 7255 filters)
25-50 f/cc	Full face, supplied air respirator operated in positive pressure mode. (Example: 3M 7800 with W9435 hose and W3195 regulator)

NOTE

f/cc = Fibers per cubic centimeter

HEPA = High-efficiency particulate air filter.

V. PHYSICAL CHARACTERISTICS

Appearance/Odor:	White board or shape/No odor	Specific Gravity: -(H_2O-l.):	.2 -.6
Boiling Point:	N/A		
Evaporation Rate (Butyl - Acetate=l.):	N/A	Melting Point:	N/A
Solubility in Water:	Negligible	Vapor Pressure:	N/A
Vapor Density (Air=1):	N/A	Percent Volatile:	N/A

VI. FIRE AND EXPLOSION DATA

Flash Point:	Non-flammable
Auto-ignition Temp:	None

Flammability Limits in Air (% By Vol.)	N/A	Upper: Lower:	N/A N/A
Usual Fire or Explosion Hazards:	None		
Special Fire Fighting Procedures	Use extinguishing method suitable for type of surrounding fire.		

VII. REACTIVITY DATA

Stability/Incompatibility:	Stable under normal condition of use. Incompatible with strong acids and alkalies.
Hazardous Decomposition and By-products:	None

VIII. ENVIRONMENTAL INFORMATION

Spill or Release to the Environment:	Vacuum clean dust where possible. Use a dust suppressant if sweeping is necessary. Personal safety and exposure recommendations described elsewhere in this data sheet apply to exposure during clean-up of spilled material.
Waste Disposal:	Wastes generated during use or demolition are not hazardous wastes as defined by 40 CFR 261. Transportation, storage, and disposal of this product must comply with Federal, State and Local regulations.
Toxic Substances Control Act (TSCA):	All substances in this product are listed, as required, on the TSCA inventory. These products contain RCF which may be subject to Section 12 (b) Export Notification Requirements.
Toxic Substances Control Act (TSCA):	All substances in this product are listed, as required, on the TSCA inventory. These products contain RCF which may be subject to Section 12 (b) Export Notification Requirements.
SARA Title III:	This product does not contain any substances reportable under Sections 302, 304, 313. Sections 311/312 apply.

IX. SPECIAL PRECAUTIONS / SUPPLEMENTAL INFORMATION

Product which has been in service at elevated temperatures (greater than 1800 °F) may undergo partial conversion to cristobalite, a form of crystalline silica. Chronic exposure to respirable crystalline silica may lead to delayed lung injury (silicosis). The amount of cristobalite present will depend on the temperature and length in service.

IARC has concluded that crystalline silica from occupational sources inhaled in the form of quartz or cristobalite is carcinogenic to humans (Group 1) [IARCMonograph Vol. 68, June 1997]. The OSHA permissible exposure limit (PEL) and the 1988-89 ACGIH threshold limit value (TLV) for cristobalite is 0.05 mg/if (respirable dust). Particular care should be taken when working with “used” material to minimize generation of dust. When removing and handling product used in high temperature applications, special caution should be taken to avoid unnecessary cutting and tearing of the used material to minimize generation of airborne dust. Workers should Use respiratory protection. Use NIOSH or MSHA approved equipment when airborne exposure limits may be exceeded, especially in confined areas with inadequate ventilation.

Insulation surfaces should be lightly sprayed with H_2O before removal to suppress airborne dust. As water evaporates during removal, additional water should be sprayed on surfaces as needed. Only enough water should be sprayed to suppress dust so that water does not run on to the fiber in the work area.

After RCF removal is completed, dust-suppressing cleaning methods, such as wet sweeping or wet vacuuming, should be used to clean the work area. If dry vacuuming is used, the vacuum must be equipped with a HEPA filter. Air blowing or dry sweeping should never be used. Dust-suppressing components can be used to clean up light dust.

X. INGREDIENTS / HEALTH HAZARD INFORMATION

COMPONENT LIMITS	CAS NO.	%	EXPOSURE LIMITS
Refractory Ceramic Fiber	142844-00-6	40-95	.5 Fiber/cc Guideline-RRC* 5 mg/M$^{3\text{-Nuisance}}$ Respire – OSHA 10 mg/M$^{3\text{- Nuisance Total}}$ – ACGIH*
Amorphous Silica	7631-86-9	0-60	6 mg/M' (total) PEL
Inert Fillers and Organic Binders**			N/A
Remaining components not determined hazardous and/or hazardous components present at less than 1.0% (0.1% for carcinogens)	N/A	Trace	N/A

*Pending the results of long-term health effects studies, airborne exposures should be controlled at or below the recommended industry exposure guidelines listed above.

**Identity, CAS Numbers and/or percent composition are trade secrets.

As of the date of preparation of this document, the foregoing information is believed to be accurate and is provided in good faith to comply with applicable Federal and State laws. However, no warranty or representation, expressed or implied, is made as to the accuracy or completeness of the foregoing data.

Product Safety Information

Refractory Ceramic Fibre Product

		⚠ WARNING This product contains refractory ceramic fibers which have been identified by the International Agency for Research on Cancer (IARC) as possibly carcinogenic to humans.

This product contains refractory ceramic fibers which have been identified by the International Agency for Research on Cancer (IARC) as possibly carcinogenic to humans.

Avoid breathing fiber particulates and dust.

RISKS:

- Possible cancer hazard by inhalation
- May cause temporary irritation to eyes, skin, and respiratory tract

PRECAUTIONARY MEASURES:

- Minimize airborne fibers with engineering controls.
- Use NIOSH/MSHA approved respiratory as required (see MSDS).
- Wear long sleeved, loose-fitting clothing, eye protection, and gloves

FIRST AID MEASURES:

Eyes: Flush with water.

Skin: Wash with soap and warm water.

Ingestion: Do not induce vomiting. Get medical attention If gastrointestinal symptoms develop.

Inhalation: Remove to fresh clean air.

If any of the above irritations persists, seek medical attention.

CONSULT MSDS FOR ADDITIONAL PRODUCT INFORMATION AND HANDLING INSTRUCTIONS.
REX ROTD CORPORATION
P.O. BOX 980
FOWLERVILIE, MI 48836
517/223-3787

Explanation of Safety Information and Symbols

Safety Notes and Symbols Used Throughout These Operating Instructions

		DANGER Indicates a hazardous situation which, if not avoided, will result in death or serious injuries.
		WARNING Indicates a hazardous situation which, if not avoided, could result in death or serious injuries.
		CAUTION Indicates a situation which, if not avoided, could result in damage to equipment or property.
		NOTE Is used for useful hints and information regarding the application.

Additional Symbols for Safety Information

		Wear safety gloves!
		Wear safety goggles!

		Harmful liquids!
		Electrical shock!
		Hot surfaces!
		Fire hazard!
		Explosion hazard!
		Suffocation hazard!
		Biological hazard!
		Contamination hazard!

Standards and Directives

The Box Furnaces complies with the following standards and guidelines:

- Current/Approved Agency standards (Underwriters Laboratory/CSA/CE).

Introduction

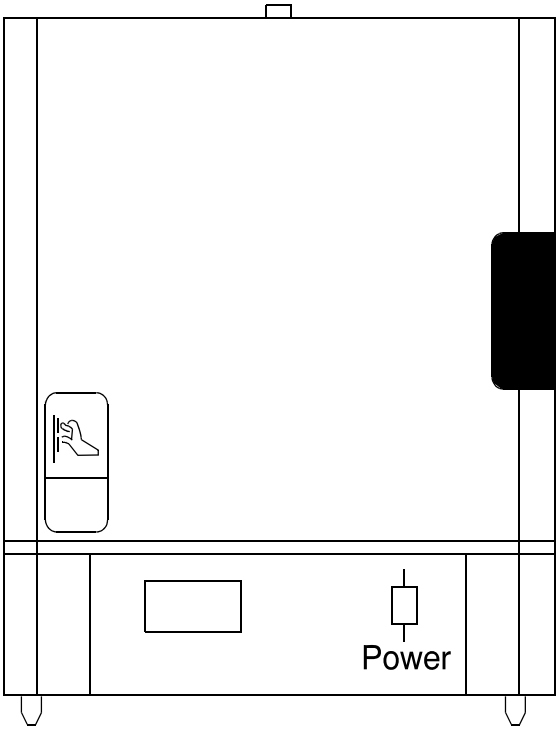

Figure 1. 1100 °C Box Furnace

Thermo Fisher Scientific BF51800 Series is a family of ultra lightweight, economical, laboratory box furnaces. The low thermal mass Moldatherm® insulation/heating element provides fast duty cycles, energy conservation, and efficient programming. Refer to **Table 1. "BF51800 Series Moldatherm Box Furnaces"** for specifications.

Features and Benefits

- Controlled heat-up rate eliminates thermal shock to materials.
- Quick heat-up and cool-down rates.
- Four chamber sizes.

- Energy efficient Moldatherm insulation suitable for high interior-exterior temperature differential. The unit is rated for a maximum operating temperature of 1100 °C.
- Resists attack from most corrosive agents and can be used in atmospheres other than air.
- Side-hinge door for convenient operation.
- Air vent, standard.
- Atmosphere inlet port standard.
- 16 segment programmable temperature controller.
- Digital instrumentation for precise temperature setpoint and display. Microprocessor capable of automatically optimizes control parameters during furnace operation.
- Main power ON/OFF switch on control panel.
- Safety interlock switch automatically interrupts power to heating element when door is opened. This feature protects heating element and eliminates operator's exposure to electrical shock.
- Type K thermocouple.

Specifications

Table 1. BF51800 Series Moldatherm Box Furnaces.

Model	Dimension W X F-B X H in.(cm)		Watts	Control Type	Cord No.	Voltage	Net Prod. Wt. lbs (kg)
	Chamber	Exterior					
BF51848A	4X8X4 (1.01X20.3X10.1)	15x20x17.5 (38.1x50.8x44.4)	1,800	16 Segment Pro gramma-ble Controller	5-20	120/VAC 50/60 Hz	45 (20.4)
BF51848C					6-15	208/240 VAC 50/60 Hz	65 (29.5)
BF51866A	6X9X6 (15.2X22.8X15.2)	17X21X21.5 (43.1X53.3X54.6)					
BF51866C					5-20	120/VAC 50/60 Hz	
BF51894C	9X14X9 (22.8X35.6X22.8)	21X25.75X26 (53.3X65.4X66)	3,500		6-15	208/240 VAC 50/60 Hz	97 (44.0)
					6-20		
BF51828C	12X18X12 (30.5X45.7X30.5)	24X30X28 (60.1X76.2X71.1)	5,600		No Cord		142 (64.4)

Pre-Installation

Unpacking

Carefully unpack and inspect the unit and all accessories for damage, if you find any damage, keep the packing materials and immediately report the damage to the carrier. We will assist you with your claim, if requested. Do not return goods to Thermo Fisher Scientific without written authorization. When submitting a claim for shipping damage, request that the carrier inspect the shipping container and equipment.

Operating Conditions

Sulfates, chlorides, fluorides, alkalis, and V_2O_5 can have corrosive effects on the ceramic fiber. Contact Thermo Fisher Scientific for additional information about the effects of specific atmospheres on furnace performance.

With prolonged use, hairline cracks can develop in the insulation materials. These minor cracks will not affect the furnace's performance. We recommend turning off the furnace completely when not in use. The heating unit is not damaged by rapid heating and cooling cycles.

Atmosphere Systems

The BF51800 Series furnaces are not designed for use with combustible or inert atmospheres requiring an air tight chamber. If an exhaust port is used, the furnace should not be located in an enclosed area without proper ventilation.

		WARNING Do not use combustible gases in this furnace.

		CAUTION Avoid combustible products which generate toxic or hazardous vapor or fumes. Work should only be done in a properly vented environment.

Installation

Do not exceed the electrical and temperature ratings printed on the dataplate of the furnace.

		CAUTION Improper operation of the furnace could result in dangerous conditions. To preclude hazard and minimize risk, follow all instructions and operate within design limits noted on the dataplate.

Location

Install the furnace in a level area free from vibration. To permit proper air flow, leave at least three inches of space on all sides of the unit and 12 inches above the unit.

Wiring

For detailed wiring information, **refer** **Figure 14. “wiring diagrams” Section “Wiring Diagrams”.**

120 VAC Operation

The BF51848A and BF51866A models operate on 120 VAC, 50/60 Hz, single phase. Each furnace includes a 120 VAC grounded plug and cord set. The units are completely prewired and ready for operation.

Before initial start up, inspect the furnace's wiring connections:

1. Remove the corner screws on the back panel of the furnace and detach the back panel.
2. Check that the thermocouple is securely mounted and undamaged.

3. Check the thermocouple wiring connections. Refer to Figure 2. “Thermocouple”. Red is always negative.

		CAUTION Failure to check thermocouple wiring connections before Initial start up could result in damage to the furnace.

4. Check that all electrical connections are secure. Visually check that the door properly activates the power interrupt switch near the front of the furnace.

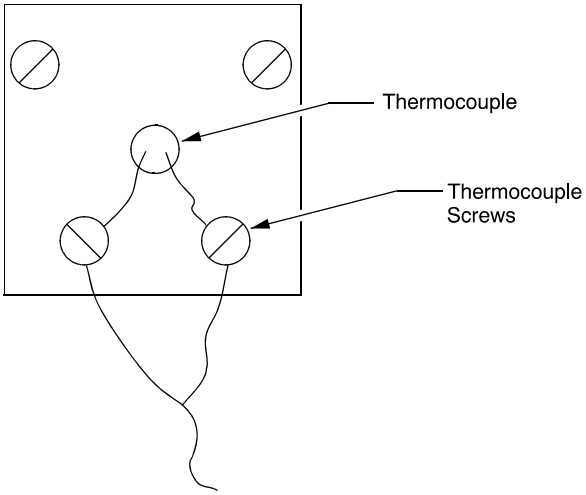

Figure 2. Thermocouple

5. Replace the back panel on the furnace and secure with the corner screws.
6. Plug the line cord into a 120 VAC, 20 amp, grounded line. The furnace draws approximately 15 amps (1800 W) for models BF51848 and BF51866.

BF51848C, BF51866C, BF51894C and BF51828C

The BF51848C, BF51866C, BF51894C and BF51828C models are 240 VAC furnaces.

Follow the procedure in **Section “BF51848C, BF51866C, and BF51894C Models”** for BF51848C, BF51866C, and BF51894C models and the procedure in **Section “BF51828C”** for BF51828C models.

BF51848C, BF51866C, and BF51894C Models

The BF51848C, BF51866C, and BF51894C models include a 240 VAC grounded plug and cord set. The units are completely prewired and ready for operation.

Before initial start up, inspect the furnace's wiring connections:

1. Remove the corner screws on the back panel of the furnace and detach the back panel.
2. Check that the thermocouple is securely mounted and undamaged.
3. Check the thermocouple wiring connections. Refer to **Figure 2. "Thermocouple".** Red is always negative.

		CAUTION Failure to check thermocouple wiring connections before initial start up could result in damage to the furnace.

4. Check that all electrical connections are secure. Visually check that the door properly activates the power interrupt switch near the front of the furnace.
5. Replace the back panel on the furnace and secure with the corner screws.
6. Plug the line cord into a 240 VAC, 15 or 20 amp, grounded line, as appropriate for the supplied line cord.

BF51828C Models

The BF51828C 240 VAC furnaces do not include a 240 VAC grounded plug and cord set.

Furnace installation requires two power wires and one ground wire (not provided). The required power wire size is 10 GA, 23.3 amps @ 240V.

To connect the furnace to the power source, complete the following steps:

1. Determine the length of wire needed to connect the furnace to the power source.
2. Label the power wires Line 1 and Line 2 and label the ground wire Ground.
3. Remove the two cover screws and the cover.
4. Make a 7/8 inch knockout in the cover.Use appropriate covers and fittings for installation**.**
5. Thread the Line 1, Line 2, and Ground wires through the 7/8 inch hole. Use appropriate conduit and clamps for the service wire. Use wire nuts to connect the wires to the appropriate lead wires:

Wire	**Label**
Line 1	L1
Line 2	L2
Ground	GND

6. Check that the thermocouple is securely mounted and undamaged. Check the thermocouple wiring connections. Refer to **Figure 2. "Thermocouple"**. Red is always negative.

		CAUTION Failure to check thermocouple wiring connections before initial start up could result in damage to the furnace.

7. Check that all electrical connections are secure. Visually check that the door properly activates the power interrupt switch near the front of the furnace.
8. Place the back panel on the furnace and secure with the corner screws.

208 VAC Operation

Thermo Fisher Scientific Moldatherm box furnace heating elements are specifically designed for operation on 120, 208, or 240 VAC. A furnace wired for 240 VAC operation can also operate on 208 VAC. However, heatup and recovery times will be longer.

Exhaust Vent

Flow from the exhaust vent on the top of the unit can be adjusted by inserting or removing the plug provided.

For most applications, the exhaust vent should be fully plugged during operation of the furnace; a closed vent results in more efficient operation and greater temperature stability. However, there are some applications which benefit from a partially or fully open exhaust vent.

The exhaust vent should be partially or fully open for the following applications:

- To provide slow cool down of work load. Some work loads may be damaged by heat shock when the furnace door is opened. The vent can be opened to allow work load to cool gradually.
- To remove unwanted vapors and gases from the furnace chamber. If you need to ventilate vapors and gases outside of the room, be sure to read **Section "Exhaust Port Connection" Chapter "Installation".**

Figure 3. "Exhaust Vents" shows how you can use the plug to adjust flow from the exhaust vent.

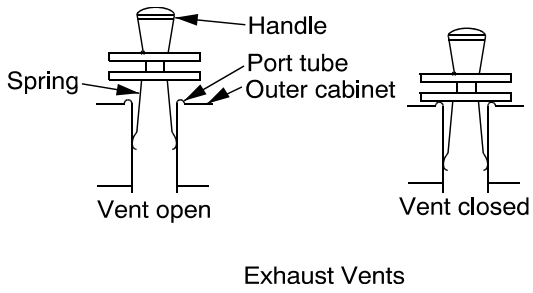

Figure 3. Exhaust Vents

Exhaust Port Connections

The one inch diameter exhaust port through the top wall of the furnace allows for the removal of unwanted vapors and gases produced during high-temperature operation.

When you need to ventilate vapors and gases outside of the room, be sure to make a proper connection to the exhaust port that allows some room air to flow into the exhaust. This is necessary to prevent “chimney effect” which sucks heat out of the chamber and results in slow run-up time or poor temperature uniformity.

Two methods of making the exhaust port connection are shown in **Figure 4. “Preventing Chimney Effect”** below. With a hood suspended above the furnace, be sure that there is at least three inches between the hood and the exhaust port. If you use a metal tube or pipe leave at least one inch clearance.

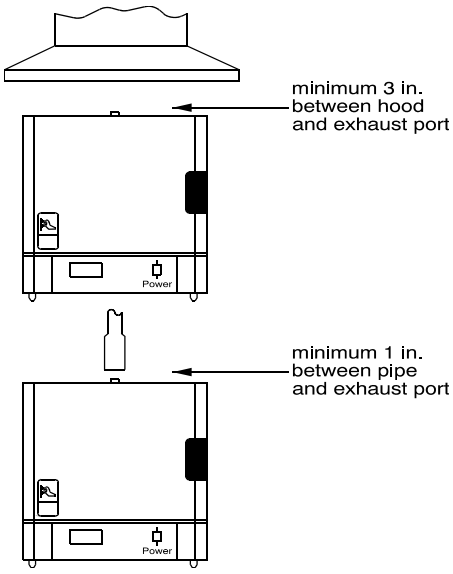

Figure 4. Preventing Chimney Effect

Atmosphere Inlet

BF51800 series furnaces have a factory-installed air/atmosphere inlet.

Most inert atmospheres (i.e. nitrogen, argon, and helium) can be safely run in this box furnace. However, maximum temperatures may be derated depending on atmosphere. An initial burn-in period in air is recommended.

Please contact Thermo Fisher Scientific prior to using the furnace with an inert atmosphere.

The furnace should be run for 7-10 hours at 1100 °C before using an inert atmosphere and after every 60 hours of use with an inert atmosphere. This burn in process will help remove contaminants and provides a protective oxide layer on the heating elements.

This furnace is not designed to be a gas-tight atmosphere furnace.

Atmosphere Inlet Port (Refer to Figure 5. Gas Inlet Tub Assembly)

The atmosphere inlet tube assembly has been packaged separately to avoid breakage during shipping and handling.

Even if you do not intend to use the gas inlet, you must install the assembly before operating the furnace. The only tool you need is a Phillips head screwdriver.

To install the gas inlet assembly:

1. Carefully remove the assembly from the package and inspect for any damage.
2. Remove the two mounting screws from the rear housing panel of the furnace.
3. Insert the ceramic tube end through the access hole in the rear of the furnace and guide the tube into the back of the chamber.
4. Align the mounting holes in the rear housing panel with the holes in the gas inlet tube assembly and secure the assembly with the mounting screws.

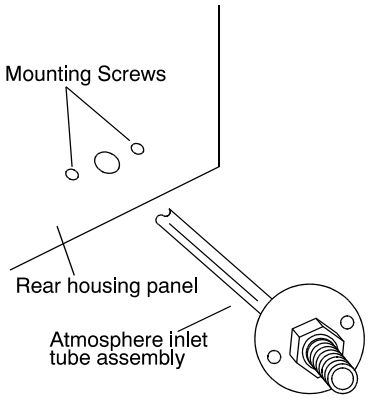

Figure 5. Gas Inlet Tube Assembly

Hearth Plate Information

Why Use

- To provide a load bearing surface and distribute the weight of product being heated.
- To protect the furnace chamber from spillage.
- To lengthen the life of furnace, by allowing heat from the chamber floor to circulate into the chamber center.

When to use

- Hearth Plates are recommended during each furnace operation.

How to Install

- Hearth plates are designed with one grooved or concave surface.
- The grooved or concave surface must be positioned agained the chamber floor.

		CAUTION Most hearth plate materials made of ceramic fiber and can be broken if dropped.

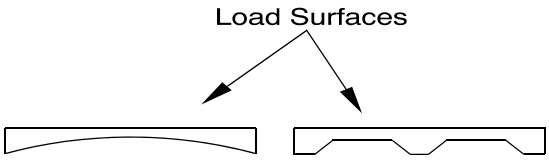

Figure 6. Hearth Plate Concave and Grooved.

Guidelines for Ashing Application

Ashing products at relatively low furnace temperatures (400 ° to 800 °C) may cause carbon residue to build up on the walls, floor, ceiling and heating elements inside the furnace chamber. The carbon will look like a black powder, similar to smoke on glass from a candle.

Carbon is an electrical conductor. If the furnace chamber and heating elements are coated with carbon, an electrical short-circuit may occur and cause the elements to overheat and burn out.

There is also some danger that the carbon residue will be absorbed through the surface of the Moldatherm insulation and affect the fully embedded heating elements.

The best way remove carbon residue from the chamber and elements surfaces is to operate the empty furnace at a chamber temperature above 900 °C for one hour. Do this regularly, whenever the chamber interior shows signs of carbon residue.

Do not scrub or scrape the chamber surfaces - this may damage the heating elements and the insulation.

Start-up

		CAUTION • Observe the following precautions when operating the furnace: • Never stand in front of an open furnace. • Wear protective eyeware. • Wear protective gloves. • Use tongs to insert and remove furnace load. • Do not allow the load to touch the furnace walls. • Always use a hearth plate on the furnace bottom.

		WARNING Before maintaining this equipment, read the applicable MSDS (Material Safety Data Sheets) in the safety notes of this manual.

		WARNING When installing, maintaining, or removing the refractory insulation, the following precautions will minimize airborne dust and ceramic fiber: • Keep personnel not involved in the installation out of the area. • Use a good vacuum to clean area and equipment. Do not use compressed air. • Use NIOSH high efficiency respirator (3M #8710 or equivalent). • Wear long sleeve clothing, gloves, hat, and eye protection to minimize skin and eye contact. Do not wear contact lenses. • Thoroughly wash self after work is complete. • Launder work clothing separate from other clothes and thoroughly clean laundering equipment after use. If clothing contains a large amount of dust and/or ceramic fiber, dispose of rather than clean. • Promptly place used ceramic fiber parts and dust in plastic bags and dispose of properly.

Furnace Start Up

The furnace has a power interrupt switch. Opening the furnace door shuts off power to the heating unit. The door must be completely closed before the furnace will operate.

To start up the furnace and prepare it for normal operation, complete the following steps:

1. Check the door seal (**Refer to** **Chapter "Start Up" Section "Door Seal Check"**).
2. Turn furnace ON.
3. Using the program described in **Chapter "Start Up" Section Ramp to "200°C"**, run the furnace for two hours at 200 °C.
4. Check for heat loss through the door. In the event of heat loss, recheck the door seal **(Refer to** **Chapter "Start Up" Section "Door Seal Check" and Section "Door Seal Adjustment")****.**

5. Adjust the setpoint to 550 °C as directed in **Chapter "Start Up" Section "Ramp to 550 °C".**
6. Run the furnace for two hours at 550 °C.
7. Check for heat loss through the door. In the event of heat loss, recheck the door seal (**Refer to Chapter "Start Up" Section "While the furnaces is at 550 °C").**
8. Run the furnace for two hours at 1,000 °C as directed in **Chapter "Start Up" Section "Ramp to 1000 °C" and "Operate for Two Hours".**
9. Let the furnace cool to room temperature.

Door Seal Check

It is very important to check the door seal before using this furnace. Door seal integrity is essential to maintain temperature uniformity and prevent fumes being released into the area surrounding the furnace.

To check the door seal:

1. With the furnace power off and the chamber cold, open the door.
2. Insert a strip of paper (a couple of inches wide) between the door insulation and the chamber opening. Do not position the paper in the comer of the chamber. Close the door.
3. Slowly pull the paper strip from the outside. You should feel some resistance. If the paper does not pull out, this area of the door seal may be too tight, causing a gap in another area of the door seal.
4. Repeat this test at 2-inch intervals around the door. If the door does not seal properly, a door adjustment must be done **(Chapter "Start Up" Section "Below Door Seal Adjustment").**

Door Seal Adjustment (if necessary)

To adjust the door seal:

1. Door assemblies have hex nuts attaching the insulation frame to the outer door frame. Loosen the appropriate nuts and move the door insulation frame to improve the door seal.
2. Recheck the door seal, following the instructions above.
3. If a gap is detected only in the center top edge of the door seal, then the top corners of the sealing surface of the door may be sanded to lessen the center gap.
4. After each adjustment recheck the door seal.

5. The door seal has been adjusted properly if there is no heat loss when operating the furnace up to 500 °C.

Door Latch Plate Adjustment

2. With Pull Pocket removed, note the 2 hex nuts in the sheet metal hole. These secure the Latch Plate to the Door Shell.
3. Loosen one or both hex nuts to make necessary adjustment to the Latch Plate (toward or away from Cabinet front), to achieve a secure catch to the Magnet(s) on Cabinet face, an EVEN gap between Top and Latch-side of Door and Cabinet AND the seal of the Door Insulation to the Chamber insulation opening.
4. See Door Seal adjustment section for 'paper strip' method to test the seal of the Door Insulation to the Chamber insulation opening (picture below).
5. Tighten hex nuts to secure the Latch Plate.
6. Install thicker edge of the Pull Pocket first, into the front edge of the sheet metal hole, pivot and snap-in rear edge.

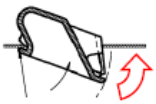

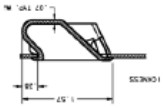

Paper test of the Door insulation seal and EVEN gap between Door and Cabinet.

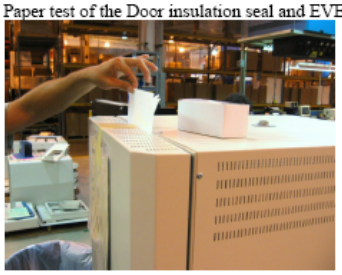

2. With Pull Pocket removed, note the 2 hex nuts in the sheet metal hole. These secure the Latch Plate to the Door Shell.
3. Loosen one or both hex nuts to make necessary adjustment to the Latch Plate (toward or away from Cabinet front), to achieve a secure catch to the Magnet(s) on Cabinet face, an EVEN gap between Top and Latch-side of Door and Cabinet AND the seal of the Door Insulation to the Chamber insulation opening.
4. See Door Seal adjustment section for 'paper strip' method to test the seal of the Door Insulation to the Chamber insulation opening (picture below).
5. Tighten hex nuts to secure the Latch Plate.
6. Install thicker edge of the Pull Pocket first, into the front edge of the sheet metal hole, pivot and snap-in rear edge.

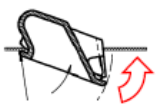

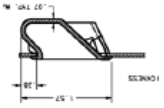

Paper test of the Door insulation seal and EVEN gap between Door and Cabinet.

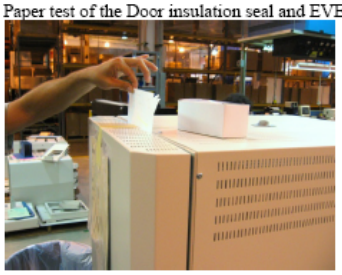

UP150 Controller Operation

The furnaces described in this manual all use the UP150 programmable controller, Version 56. The programmer/controller will not operate the heaters (to change or maintain a temperature above ambient) unless a local setpoint has been selected or a specified program is running.

If at any time the controller buttons have not been pushed for 2 minutes, the controller will return to the regular display of process temperature and operating setpoint.

The following sections explain how to enter and run the programs recommended to prepare the furnace for normal operation. For more detailed operation information, refer to Chapter "Start Up" **Section "UP150 Controller Operation"**.

Ramp to 200 °C

The simple start-up program described below is designed to direct the controller to operate through a simple ramp-to-higher temperature, stabilize, and hold indefinitely. This will give the operator the necessary time to check the door seal and allow the furnace insulation to normalize.

Setting the High Temperature Alarm Setpoint

The first step is to set the high temperature alarm to 250 °C:

1. Press and HOLD for three seconds the "SET/ENT" button to display "modE rES".
2. Press and release the "SET/ENT" button to display "PrG 0".
3. Press the “UP/RESET” Button to show the lower display value of "1".
4. Press and release the “SET/ENT” button to select this new value and advance to the "SSP 25" display.
5. Press and release the “SET/ENT” button until the High Temperature Alarm set point value is displayed as "A1".
6. Select an alarm set point “50 °C” above the target set point to be selected. In this instance select "250".
7. Press and release the “SET/ENT” button to place this new value in the controller memory.
8. Press and HOLD for three seconds the “SET/ENT” button to exit this menu.

Setting the Local Setpoint

Next, set the local setpoint to 200 °C:

1. Make sure the indicators beside "RUN" and "L" on the controller face are off. If either indicator is on, press and hold the “SET/ENT” button until the display shows "modE". Select "rES" in the lower display with the "arrow" buttons. Press and release the “SET/ENT" button once.
2. Press and release "SET/ENT" until "LoC" is displayed. Make sure the value below "LoC" is "0" (zero). If it is not "0" use the "down arrow" to make "0" and press and release "SET/ENT" button to register the change to "0".
3. Press and release the “SET/ENT” button until "modE" is displayed.
4. At "modE" display, press the "UP" arrow button to make the lower value "LCL". Press and release the “SET/ENT” button once to enter the local mode.
5. Use the "UP" and "DOWN" buttons to select the operating temperature setpoint of "200".

6. Press and release the "SET/ENT" button once to select this setpoint value. This will show the display with the measured temperature in the upper display, the lower display showing the present temperature setpoint.

This display and the buttons will remain active as long as power is being supplied to the control module.

In this display mode, the arrow buttons can be used to adjust local setpoint, shown in the lower display. After adjusting a value, always remember to press “SET/ENT” to register the change.

While the Furnace Is at 200 °C

After the furnace operates at 200 °C for 2 hours, check for heat Loss in the area above the door and cabinet meet together.

If no heat loss is detected, then proceed to the next temperature Level.

If heat loss is detected, stop the controller operations, cool the furnace to room temperature and recheck the door seal.

In case you need to stop and check the door seal, exit the Single Setpoint or Local Mode and turn off the energy to the heaters.

		NOTE Follow these steps only if heat loss has been detected and you need to shut off the heaters to recheck the door seal.

To exit single setpoint mode:

1. Press and hold for three seconds the "SET/ENT" button to display "modE LCL".
2. Press and release the "DOWN" button twice to select the display "modE rES".
3. Press and release the "SET/ENT" button once to select the Reset Mode, At this point, the red indicator light should go off beside the display label "L" (Local Mode).

This will change the display showing the measured temperature in the upper display, with the lower display showing the Start Set Point (SSP) temperature setpoint of the program, typically at “25”.

Ramp to 550 °C

The next step in the startup procedure is to ramp to 550 °C and hold.

Resetting the High Temperature Alarm Setpoint

1. Press and HOLD for three seconds the "SET/ENT" button to display "modE rES",
2. Press and release the "SET/ENT" button to display "PrG 0".
3. Press the "UP/RESET" Button to show the lower display value of "1".
4. Press and release the “SET/ENT” button to select this new value and advance to the "SSP 25" display.
5. Press and release the “SET/ENT” button until the High Temperature Alarm Setpoint value is displayed as "A1".
6. Select an alarm setpoint 10 °C above the target setpoint to be selected. In this instance select "560".
7. Press and release the “SET/ENT” button to place this new value in the controller memory.
8. Press and HOLD for three seconds the “SET/ENT” button to exit this menu.

Resetting the Local Setpoint

Next, set the local setpoint to 550 °C:

1. Make sure the indicators beside "RUN" and "L" on the controller face are off. If either indicator is on, press and hold the “SET/ENT” button until the display shows “modE”. Select “rES” in the lower display with the "arrow" buttons. Press and release the “SET/ENT” button once.
2. Press and release "SET/ENT" until "LoC" is displayed. Make sure the value below "LoC" is "0" (zero). If it is not "0" use the "down arrow" to make "0" and press and release "SET/ENT” button to register the change to "0".
3. Press and release the "SET/ENT" button until "modE" is displayed.
4. At "modE" display, press the "UP" arrow button to make the lower value "LCL", Press and release the “SET/ENT” button once to enter the local mode.
5. Use the "UP" and "DOWN" buttons to select the operating temperature setpoint of "550".
6. Press and release the “SET/ENT" button once to select this setpoint value. This will show the display with the measured temperature in the upper display, the lower display showing the present temperature setpoint.

While The Furnace Is at 550 °C

After the furnace operates at 550 °C for 2 hours, check for heat loss in the area above the door and cabinet meet together.

If no significant heat loss is detected, then proceed to the next temperature in this start-up procedure.

If substantial heat loss is detected (compared to the rest of the cabinet top), stop the controller program (Refer to Chapter “Start Up” **Section “While the furnace is at 200 °C”**), cool the furnace to room temperature and recheck the door seal.

Ramp To 1000°C and Operate for Two Hours

If the highest planned temperature setpoint is less than 1000 °C, this alternate temperature may be used in place of 1000 °C this step.

Resetting the High Temperature Alarm Setpoint

1. Press and HOLD for three seconds the "SET/ENT" button to display "modE rES".
2. Press and release the “SET/ENT” button to display "PrG 0".
3. Press the “UP/RESET” Button to show the lower display value of "1".
4. Press and release the “SET/ENT” button to select this new value and advance to the "SSP 25" display.
5. Press and release the “SET/ENT" button until the High Temperature Alarm Setpoint value is displayed as "A1".
6. Select an alarm setpoint 10 °C above the target setpoint to be selected. In this instance select "1010".
7. Press and release the “SET/ENT” button to place this new value in the controller memory.
8. Press and HOLD for three seconds the “SET/ENT” button to exit this menu.

Resetting the Local Setpoint

Next, set the local setpoint to 1000° C:

1. Make sure the indicators beside "RUN" and "L" on the controller face are off. If either indicator is on, press and hold the "SET/ENT" button until the display shows "mode". Select "rES" in the lower display with the "arrow" buttons. Press and release the “SET/ENT” button once.
2. Press and release “SET/ENT” until "LoC" is displayed. Make sure the value below "LoC" is "0" (zero). If it is not "0" use the 'down arrow' to make "0" and press and release "SET/ENT" button to register the change to "0".
3. Press and release the "SET/ENT" button until "modE" is displayed.

4. At "modE" display, press the "UP" arrow button to make the lower value "LCL". Press and release the “SET/ENT” button once to enter the local mode.
5. Use the "UP" and "DOWN" buttons to select the operating temperature setpoint of "1000".
6. Press and release the "SET/ENT" button once to select this setpoint value. This will show the display with the measured temperature in the upper display, the lower display showing the present temperature setpoint.
7. Let the furnace run for two hours after achieving the 1000 °C setpoint.

This ends the third and final step in the furnace start-up procedure. Turn off the power to this furnace and let it cool to room temperature. Keep the door closed until the furnace is cool.

Operation - UP150 Controller

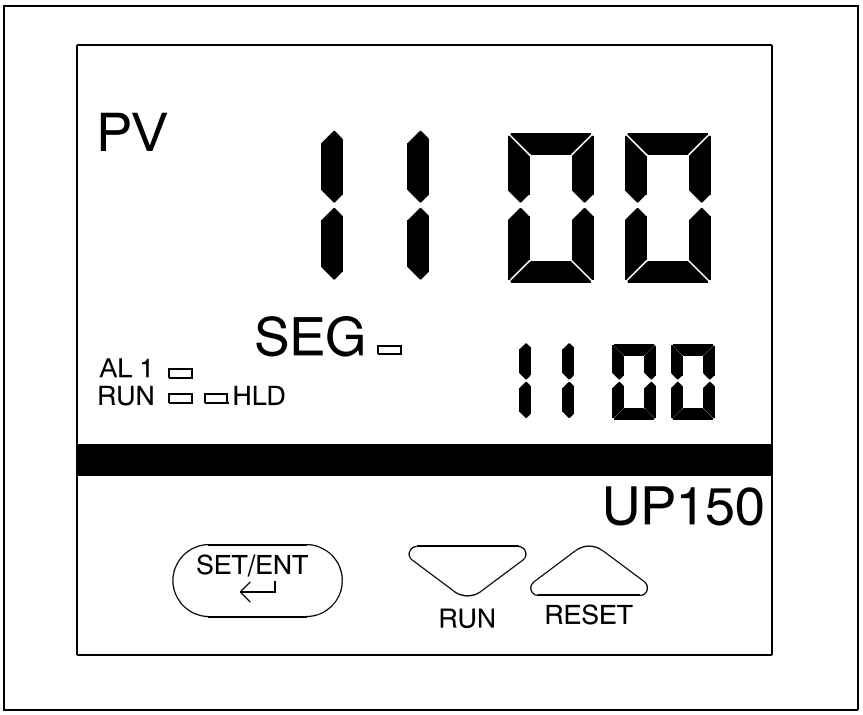

Figure 7. UP150 Control Display.

The furnace temperature controller is configured and tuned at the factory to function well for most applications. Occasionally, it may be advisable to configure the temperature controller differently to suit a particular working environment or process.

		CAUTION Before reconfiguring the controller, read this chapter and the UP150 operation manual. Reconfiguring the controller can change the unit characteristics and design parameters, which can hamper performance and make the equipment dangerous to use.

		NOTE If the process temperature or load changes significantly an auto tune session may be necessary to optimize the chamber performance. Recording the values assigned to “P”, “I”, And “D” from previous auto-tune session, would allow these values to be manually entered using Table 2.

UP150 Controller Overview

This version (V 54 & 56) of the UP150 controller features the dual operation modes of Single Setpoint and Programming. Each mode has distinct operations and uses.

Single Setpoint Mode allows the user to select a single target temperature setpoint in the controller. The controller will operate the heating equipment until this setpoint value is achieved, then maintain this setpoint indefinitely.

Programming Mode allows the user to enter a series of setpoint and time values.The controller will follow these sequences of instructions to energize the heating equipment until the entire sequence is complete.

The Temperature Controller senses the chamber air temperature of the furnace (the PV or process value) and supplies the heat necessary to achieve the desired setpoint. The controller includes an LED display and a push button keypad. Refer to “Table 1” and “Table 2” for lists of displayed parameters and keypad functions.

UP150 Parameter Function.

		CAUTION Some changes will have a dramatic affect on the temperature control in the equipment where this controller is installed.

		NOTE This procedure is used to view and make changes in the configuration of YOKOGAWA model UP150 Version P.54 & P.56 temperature controller.

		NOTE If the controller buttons are NOT pushed for 2 minutes, the controller will return to the regular operator mode/menu.

Table 1. Access To Setup Parameters

{For controllers only with Communications Option already installed}.			
Press and hold SET/ENT button for three seconds.			
Press and release SET/ENT button to display LOC.			
Verify LOC has a value of 0. If not 0, select 0 with DOWN button & press SET/ENT.			
At LOC press DOWN button to select -1, then SET/ENT.			
Press SET/ENT to view each parameter, ARROWS to select values.			
Parameter	°C Value	°F Value	Description
In	1	31	Input Type, K T/C
SPH	1100	2012	High Setpoint Limit
SPL	0.0	32	Low Setpoint Limit
tnU	0.0	0	Program time units; hour.minute;1, minute. second
SC	on	on	Super Control
dr	0	0	Direct/Reverse Output Action

PSL	0	0	Protocol Selection
Adr	1	1	Controller Address, selec-tion upto 99
bPS	9600	9600	Baud Rate
Pr 1	EVN	EVN	Parity (even)
StP	1	1	Stop Bit
dLn	8	8	Data Length.
Exit-Press and Hold SET/ENT for three seconds.			

Table 2. Access to Operating Parameters

Press and Hold SET/ENT for three seconds			
Press SET/ENT to view each parameter, Arrows to select values.			
Parameter	°C Value	°F Value	Description
node	rES	rES	Operation Mode: reset (no output) rUn, running the program; LCL, local (single setpoint)
PrG	0	0	Program access, select “1”and SET/ENT to enter menu
£ HoLd	oFF	oFF	Program hold mode: on to suspend program time
£ AdV	oFF	oFF	Program advance mode: to skip the current segment
£ Parameter and value only displayed while program is running			
LSP	0 to 1100	32 to 2012	Local Setpoint: selectable through equipment range
CtL	Pid	Pid	Control Mode
‡ At	oFF	oFF	Auto Tuning
Parameter and value only displayed while Program Running or Local Modes are active			
P	30	60	Proportional Band

I	208	208	Integral Time
d	52	52	Derivatives Time
Ct	1	1	Heat Cycle Time
FL	oFF	oFF	Sensor Filter
bs	§	§	Bias or Offset of PV (current temperature)
§ Variable values that is set during temperature calibration, default to 0			
LoC	0	0	Key Lock: all values; 1, set-point only; 2, no adjustment
Note: Restore LOC setting originally found before Table 1 was accessed			
Exit - Press and hold SET/ENT button for three seconds.			

Table 3. Access to Program Parameters

Press and hold SET/ENT button for three seconds			
Press and release SET/ENT to display PrG			
At PrG press UP button to select 1, then SET/ENT			
Press SET/ENT to view each parameter, ARROWS to select values.			
Parameter	°C Value	°F Value	Description
SSP	25.0	77	Start setpoint for programming
StC	1	1	Start code:0. Program starts with SSP value 1. Program starts with current measured temperature. 2. Program targets first setpoint.
SP1	¢	¢	Target setpoint 1
¢ Variable value selected to create program segments; see program instructions for details			
tn1	¢	¢	Segment time period 1
SP2	¢	¢	Target setpoint 2
tn2	¢	¢	Segment time period 2

These parameters continue sequentially as needed through			
SP16	¢	¢	Target setpoint 16
tn16	¢	¢	Segment time period 16
EV1	0	0	Event 1 Type (Do not Change)
AL1	9	9	Alarm 1 Type (Do not Change)
AI	1110	2030	Alarm Setpoint; Recommend 10° above highest setpoint
HY1	1	1	Alarm 1 Hysteresis
EV2	0	0	Event 2 Type
AL2	oFF	oFF	Alarm 2 Type; not used
A2	0	0	Alarm 2 Setpoint; not used
HY2	1	1	Alarm 2 Hysteresis; not used
JC	0	0	Junction Code: 0, reset (turn off output) at end of program 1. Hold program at last operated target setpoint. 2. Repeats the program continuously. 3. At end of program reverts to local setpoint.
utZ	oFF	oFF	Wait zone: oFF, disabled
	1 to 164	1 to 280	Range of temperature delta allowed at end of segment
Exit - Press and hold SET/ENT button for three seconds.			

Table 4. Push Button Keypad.

Button	Function
SET/ENT	Pressing and holding the SET/ENT for three seconds advances the display to the Operation Parameters Menu. While in the Operation Parameters Menu, use SET/ENT to move from one parameter to next, and to register changes you have made in setpoint and parameter value. Holding SET/ENT for three seconds exits the Operation, Setup or program Parameters menu.
△	Use the Up Arrow button to increase the temperature setpoint display and change parameter values in the Operation and Setup Parameter menus. Whenever you change the value of setpoint or parameter, the decimal point flashes to remind you to register the changed value with SET/ENT.
▽	Use the Down Arrow button to decrease the temperature set-point display and to change parameter values in the Operation and Setup Parameter menus. Whenever you change the value of a setpoint or parameter, the decimal point flashes to remind you to register the changed value with SET/ENT.

Single Setpoint Operation

The following sections describe how to operate the controller in single setpoint (local) mode. Use this mode when you only need to run the furnace with a specific setpoint and do not require a programmed sequence of steps - Or a Temperature ramp change over a period of time.

Setting High Temperature Alarm Setpoint:

1. Press and HOLD for three seconds the "SET/ENT" button to display "modE rES".
2. Press and release the "SET/ENT" button to display "PrG 0".
3. Press the "UP/RESET" Button to show the lower display value of "1".
4. Press and release the "SET/ENT" button to select this new value and advance to the "SSP 25" display, the beginning of the program mode.
5. Press and release the "SET/ENT" button until the High Temperature Alarm Setpoint value is displayed as "A1".

6. Select an alarm setpoint 10 °C above greater than the target setpoint to be selected.
7. Press and release the "SET/ENT" button to select this new value in the controller memory.
8. Press and HOLD for three seconds the "SET/ENT" button to exit this menu.

Accessing Local Mode

1. Press and hold for three seconds the "SET/ENT" button to display "modE rES".
2. Press and release the "UP" button twice to select the display "modE LCL".
3. Press and release the "SET/ENT" button once to select Local Mode. This selection causes the red indicator to illuminate beside "L" on the control panel. refer to “Figure UP150 Control Display”.
4. Use the "UP" and "DOWN" buttons to select the desired operating temperature setpoint.
5. Press and release the "SET/ENT" button once to register the setpoint value.
6. The display will then show measured temperature in the upper "PV" display, the present temperature setpoint in the lower display.
7. This display and the buttons will remain active as long power continues to the control module. Power interruptions will cause the controller to enter reset or standby mode in which no actions are made to operate the heating equipment.

You may use the arrow buttons to adjust the setpoint (lower) value in this local display mode, The "SET/ENT" button will register setpoint value changes, until these values are changed again.

Exiting Local Mode

To exit Single Setpoint or Local Mode and turn off the energy to the heater:

1. Press and hold for three seconds the "SET/ENT" button to display "modE LCL".
2. Press and release the "DOWN" button twice to select the display "modE rES".
3. Press and release the "SET/ENT" button once to select the display "modE rES". Reset Mode.
4. This selection cause the red indicator to extinguish beside the display label "L" that had indicated the Local Mode.
5. This will change the display showing the measured the temperature in the upper display, with the lower display showing the Start Set Point (SSP) temperature setpoint of the program.

Programming Operation: Entering a Program

This section describes how to enter a simple program that is designed to:

- Direct the controller to ramp to a higher temperature;
- Stabilize;
- Ramp to a lower-temperature;
- End with an indefinite dwell.

If you intend to use the program features of the controller, it is advisable to go through all the steps in this sample program to familiarize yourself with the elements of programming mode.

		NOTE If the controller buttons are NOT pushed for 2 minutes, the controller will return to the regular operator mode/menu.

Entering Programming Mode

To access the programming menu:

1. Assure the indicators beside "RUN" and "L" on the controller display are extinguished. If either indicator is illuminated, press and hold the "SET/ENT" button until the display shows "modE", Select “rES" in the lower display with the "arrow" buttons. Press and release the “SET/ENT” button once.
2. Press the "SET/ENT" button for 3 seconds to display "modE" in the upper display and "rES" (Reset) in the lower display.
3. Press and release “SET/ENT” until "LoC" is displayed. Make sure the display below "LoC" is "0" (zero). If it is not "0", use “DOWN ARROW” to select "0" and press and release "SET/ENT” button to register the change to "0".
4. Press and release the "SET/ENT" button until "PrG" is displayed.
5. At "PrG" display, press the “UP ARROW” to make the lower display "1".
6. Press and release the "SET/ENT" button once to enter the programming menu.

Entering program Parameters

The first display is the Start Set Point parameter, shown as "SSP" in the upper display. The value assigned to SSP is usually the current room temperature, 25 °C.

See Figure 8. Ramp and Dwell Graph for an illustration of the program profile and Table 5.Program Parameters Menu a table of the parameters entered.

Basic Ramp and Dwell Parameters:

1. Use the arrow buttons to select "25" in the below "SSP" display, then press and release the "SET/ENT" button twice to enter this new value for "SSP" is correct and does not need to be changed, press and release the "SET/ENT" button once to advance to the "StC" display.
2. Next is the Start Code parameter, shown as "StC" in the upper display. The value assigned to StC is usually "1". This will instruct the program to start with the current measured temperature. Press the "SET/ENT" button to advance to next display.
3. The next parameter, “SP1”, is the first setpoint value that is desired in the chamber and is considered a ramp segment. Select this target temperature setpoint value with arrow button then press and release the "SET/ENT" button twice to enter this value and to advance to the "tM1" display. If the value for "SP1" is correct and will not be changed, press and release the “SET/ENT” button once to advance to the "tM1” display.
4. The next parameter, "tM1", represents the first time period for the unit to reach the target temperature setpoint selected in "SP1". This selection can be a value ranging from 0.00 to 99.59, which represents hours and minutes. Select this time value with the arrow buttons and enter it by pressing and releasing the "SET/ENT" button twice.
5. Press and release the "SET/ENT" button to advance to the next display of "SP2", this is considered the dwell segment. Select the same target setpoint temperature value as "SP1" with the arrow buttons. Press and release the "SET/ENT" button twice to enter this value and to advance to next display.
6. The next parameter, "tM2", represents the second time period used to maintain or dwell at the target setpoint selected in "SP2". This selection can be a value ranging from 0.00 to 99.59, which represents hours and minutes, enter by pressing and releasing the "SET/ENT" button twice.
7. Next, "SP3" is the third setpoint value desires in the chamber. Select this target temperature setpoint with the arrow buttons and press and release the "SET/ENT" button twice to enter this value and release the "SET/ENT" button twice to enter this value and advance to the "tM3" display. If this value is correct and not changed, press and release the "SET/ENT" button once to advance to the "tM3" display.
8. "tM3" represents the third time period for the unit to reach the target setpoint selected in "SP3". This selection can be a value ranging from 0.00 to 99.59, which represents hours and minutes. Select this value with the arrow buttons and enter it by pressing and releasing the "SET/ENT" button.
9. The next parameter, "SP4" is considered the dwell segment. Select the same target temperature as "SP3" with the arrow buttons, then press and release the

"SET/ENT" buttons twice to enter this new value and to advance to next display.

Additional Program Parameters"

10. The next parameter, "tM4". Select “oFF” with the arrow buttons, then press and release the "SET/ENT" button twice to enter this new value and to advance to next display. This operation ends the offering of setpoint and time parameters.
11. The next display shows "EV1" in the upper display. The lower value should always be "0" (zero). Press and release the "SET/ENT" button once to go to next display.
12. “AL1" should always have a lower value "9". Press and release the "SET/ENT" button once to advance to the next display.
13. The next parameter, "A1", is used to select the high temperature alarm trip setpoint.
    Use the arrow buttons to select a value 10 °C (or 20 °F) higher than the highest target setpoint to be used. Select the High Temperature Alarm value with the arrow buttons then press and release the “SET/ENT” button twice to enter this new value and to advance to the "HY1" display. If the value for "A1" is correct and not changed, press and release the “SET/ENT” button once to advance to "HY1" display.
14. "HY1" is used to select the amount of temperature change below the high temperature alarm relay will reset, this value is usually "1". Select "1" with the arrow buttons and press the "SET/ENT" button <u>six times</u> to enter the correct value and advance to the "JC" display. Or if the value is correct, press the "SET/ENT" button <u>five times</u> to advance to the "JC" display.
15. For the parameter displayed as "JC", select “1” with the arrow buttons, then press and release the "SET/ENT" button twice to display "WTZ", Selecting the value of "1" will cause the program to hold the setpoint at this last segment. A value of "0" would cause the program to reset and stop running the program and stop the power to the heaters. A value of "2" will cause the program to repeat "continuously". A value of “3" will cause the controller to maintain temperature at the local (single) setpoint value.
16. When the display shows "WTZ", select a lower display value of "oFF” with the "arrow" buttons. Press and HOLD the "SET/ENT" button for 3 seconds to return to the Reset or standby display.

This concludes the steps required to enter a typical ramp- and dwell program. Below is an illustration of program profile and a Table 5 shows parameters entered.

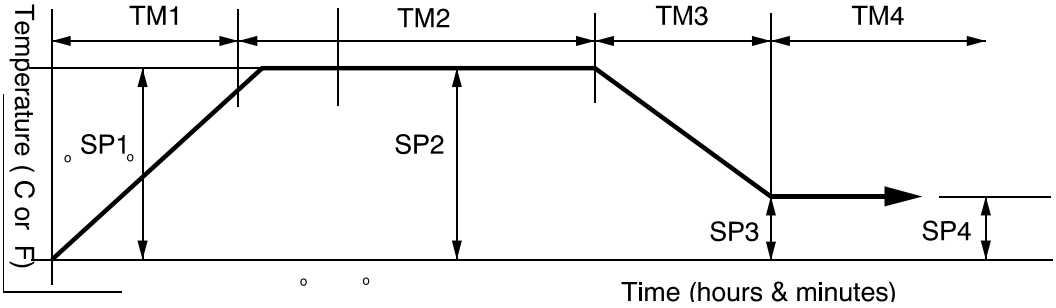

Figure 8. Ramp and Dwell Graph

In the table below, “*” denotes values typically set by user according to needs of program.

Table 5. Program Parameters Menu

Parameter	Values	Meaning
PrG	0	1 enters program menu
SSP	25	Start Setpoint
StC	1	Start Code
SP1	*	Segment 1 Setpoint
Tm1	*	Time length for Segment 1
SP2	*	Segment 2 Setpoint
Tm2	*	Time length for Segment 2
SP3	*	Segment 3 Setpoint
Tm3	*	Time length for Segment 3
SP4	*	Segment 4 Setpoint
Tm4	oFF	Time length for Segment 4 (“oFF” ends set-point and time selections)
EV1	0	Event 1(Do not change)
AL1	9	Alarm 1(Do not change)
HY1	1	Hysteresis for alarm 1
EV2	0	Event 2
AL2	oFF	Alarm 2

JC	1	Junction code (1=dwell; 0=stop 2= repeat, 3= Revert to local Setpoint at the end of program.).
wtz	oFF	Wait Zone

Running a Program

To run a program such as the one outlined above, press and hold the "DOWN/RUN" button making the "RUN" indicator illuminate. At the end of this program the "HLD" (hold) indicator is illuminated to indicate this program is in the indefinite dwell at the last target temperature. This hold indicator is caused by the "JC" selection of "1", while the "JC" selections of “0”, "2" or "3" will not illuminate the "HLD" (hold) indicator.

Ending a Program

To end a program while in the "RUN" or "HLD" (hold) mode, press and hold the "UP/RESET" button to turn off the current program and extinguish the "RUN" or "HLD" indicator.

Turning off the unit's power will also stop the program. When power is restored, the controller is in the Reset or standby mode with no power to the heaters.

NOTE

The programmer/controller will not operate the Unit's heaters (to change or maintain a temperature) unless there is a program running or a single setpoint value is selected in the Local Mode. This Controller defaults to the "RESET" (rES) mode with each power "ON". If power supply is interrupted during program run or single setpoint mode, these action operation mode must be reselected.

Using the Hold Function

To hold a running program:

1. Press and hold the SET/ENT key for 3 seconds, "noDE" will appear in the upper display. Press SET/OUT key to "HoLd".
2. Press the "arrow up" key so that "on" with flashing decimal appears in the lower display.
3. Press the SET/ENT key to accept.
4. Press and hold the SET/ENT key for a three seconds to return to the normal display.

To stop the hold mode:

Press and hold the SET/ENT key for 3 seconds. "moDE" will appear in the upper display. Press SET/ENT key to "HoLd". Press the "arrow down" key so that "oFF" with flashing decimal appears in the lower display. Press the SET/ENT key to accept. Press and hold the SET/ENT key for three seconds to return to the normal display.

Using the Advance Function

Introduction:

This section describes the sequence to advance or skip a segment in a running program. This is useful if a power outage occurred and the program needs to be advanced, skipping portions of already completed program.

While the program is running, press and hold the "SET/ENT" key for 3 seconds "mode" will appear in the upper display. Press the “SET/ENT” key to show "AdV" in the upper display. "oFF" will appear in the lower display. Press the "arrow up" key so that "on" with flashing decimal appears in the lower display. Press the “SET/ENT” key to accept. The controller will automatically return to the normal display and the increment the program segment by one.

Changing a Program

To make changes only to the target temperature and segment length times for simple program operation, follow these steps:

1. Assure the indicators beside "RUN" and "L" on the controller display are extinguished. If either indicator is illuminated, press and hold the "SET/ENT" button until the display shows "modE", Select "Res" in the lower display with the "arrow" buttons. Press and release the "SET/ENT" button once.
2. Press the “SET/ENT” button for 3 seconds to display "modE" in the upper display and "rES" in the lower display. Press and release “SET/ENT” repeatedly to display "LoC". Make sure the value below "LoC" is "0" (zero). If it

is not "0", use “DOWN” arrow to select "0" and press and release "SET/ENT" button to register the change to "0".

3. Press and release the “SET/ENT” button once to show "PrG" on the upper display.
4. Press the "UP" arrow to make the lower value "1".
5. Press and release "SET/ENT" button twice to display "SP1" Using the arrow buttons to revise the target setpoint.
6. Press and release "SET/ENT" button twice to display "tm1”. Using the arrow buttons to revise the segment time length needed to achieve the target setpoint “SP1”.
7. Press and release “SET/ENT” button to display other setpoints and segment time lengths. Use the arrow buttons to change the temperature set points and time lengths. Press and release the “SET/ENT” button to register any new values.Remember to adjust the value for “A1” to be 10°C greater than the highest setpoint.
8. Press and HOLD the “SET/ENT” button for 3 seconds to exit the program menu and return to the reset or standby display.

Auto Tuning the UP150 Controller

Auto tuning maximizes the performance of the chamber at a selected temperature with the product load's characteristics, by operating with the quickest response and minimal temperature overshoot.

Factory settings are for general purposes, but your process can be enhanced through the auto tune feature. To obtain this maximum performance, follow these steps to auto the controller.

1. Load the chamber with materials that have the same mass and thermal characteristics as an actual product load.
2. Operate the chamber to the process temperature using either local or run mode.
3. Start the Auto Tune: Press and hold the “SET/ENT” button for three seconds to display the "modE" parameter of the Operating Parameter menu.
4. Press and release the “SET/ENT” button five times to advance to the "At" parameter.
5. Press and release the “UP” arrow button to show "on" in the lower display.
6. Press the “SET/ENT” button once to enter the auto tune mode and exit the Operating Parameters menu.
7. The controller will cycle three times through a heating and cooling pattern, measuring the characteristics of the load and chamber temperature controls. During the auto tuning, “At” will alternately flash with the measured

temperature (PV) display to indicate that the auto tuning progress. The length of time for the auto tune vanes with the load, chamber size and temperature selected.

8. The auto tune is completed when the regular display of the measured temperature is shown without the "A1" value flashing. The chamber should now operate to the process temperature with the given product load, with the quickest response and minimal temperature overshoot.

		NOTE If the process temperature or load changes significantly another auto tune session may be necessary to optimize the chamber performance. Recording the values assigned to "P", "I", and “D” from previous auto-tune session, would allow these values to be manually entered using Table 2.

Temperature Offset Procedure

The purpose of this procedure is to create an offset in the displayed temperature measurement for the UP150 temperature controller.

1. Operate the furnace chamber to your normal stable temperature setpoint, with an independent temperature measurement device located in the center of chamber. The controller will be “running” the program or operating in the local mode to maintain the temperature.
2. Note any difference in the controller's measured temperature (upper display value) PV and the independent measurement. If a difference of greater than 1°C is noted proceed with the following steps. If less than 1 °C, no change is necessary.
3. Press and hold the "SET/ENT" button for 3 seconds to display "modE"
4. Verify the button lockout parameter will give access to make this display offset. Press and release the "SET/ENT" button multiple times to display "LoC". The value 0 (zero) displayed will give full access and is necessary to make the display offset changes desired. If the value displayed is 1 or 2, use the "down arrow" button to make 0 (zero) press release the "SET/ENT" button to register this change.
5. Press and release the "SET/ENT" button multiple times to display "bS" and the current offset value.
6. Calculate the offset value and select the values with the arrow buttons which is needed to make this controller display correctly. For example, if the independent measurement is 553 °C, the controller Temperature measurement PV (upper display) shows 550 °C, and the current controller offset (bS) is -2, then make controller display offset "+1" [(+3 needed offset) + (-2 current offset) = (+1 new offset)].

7. Press and release the "SET/ENT" button once to register this new offset value. Press and hold the "SET/ENT" button for 3 seconds to exit this controller menu.
8. Operate the controller to the same temperature to stabilize the chamber to check for any further variations between the controller and the independent measurement. Repeat steps 2 - 7 as necessary.
9. This completes the display offset procedure for the UP150 temperature controller. If the bottom lockout parameter "LoC" was originally on a value of 1 or 2, repeat steps 3 & 4 to return to this original value.

Contact Technical Service at 1-866-984-3766 if you have any questions.

Changing Temperature Scale Between °C and °F

To change the temperature scale in the UP150 controller to operate on °F instead of the factory setting of °C, or from °F to °C, Follow these steps.

		CAUTION These changes will alter the controller input type and associated scale-dependant parameters, and erase the stored program to default values. Please document the stored program in the controller before proceeding.

If during this procedure the buttons are inactive for more than two minutes, the controller will return to the standard display.

1. Assure the indicators beside "RUN" and "L" on the controller face are extinguish. If they are illuminated press and hold the “SET/ENT” Button to display "nodE". Select "rES" with arrow, press “SET/ENT” button to make the RUN or L indicator extinguished.
2. To access the Operating Parameters Menu, press and HOLD the “SET/ENT” button for at least 3 second to display "modE".
3. Press and release the “SET/ENT” button until the display shows "LoC" in the upper display. Make sure the value below "LoC" is "0" (zero). If it is not "0" use “down arrow” to make "0" and press and release "SET/ENT” button to register change to "0".
4. At "LoC" display, press the “down arrow” to make the lower value "-1".
5. Press and release the "SET/ENT” button to enter the Setup Parameters menu and show "In" on the upper display and a numerical value in the lower display.

6. See Table 6 for the STANDARD values for this parameter and the others needed in the following steps.
7. Select the appropriate value for the "In" parameter. Press the “UP” or “DOWN” arrow buttons to make the lower display to the new value, then press and release the “SET/ENT” button TWICE to register the new value and advance to the next parameter.
8. "SPH" is the next parameter displayed. Select and enter the new value, then press and release the “SET/ENT” button TWICE.
9. "SPL" is the next parameter displayed. Select and enter the new value, then press and release the “SET/ENT” button ONCE.
10. Press and HOLD the “SET/ENT” button for 3 seconds to exit.
11. Press and HOLD the “SET/ENT” button for 3 seconds to enter the Operating Parameter menu and show "modE" in the upper display.
12. Press and release the “SET/ENT” button until the upper display shows "P". Select the value in the table and adjust the lower display accordingly. Press and release the “SET/ENT” button TWICE.
13. “I”is the next parameter displayed. Select and enter the new value then press and release the “SET/ENT” button TWICE.
14. “d” is the next parameter displayed. Select and enter the new value then press and release the “SET/ENT” button ONCE.
15. Press and HOLD the “SET/ENT” button for at least 3 seconds to exit.
16. Enter or create a program using the new temperature scale.

The following table shows the corresponding parameters value for 1100 °C for furnace in °C and °F.

Table 6. Parameters for Changing Temperature Scale

Parameter	°C	°F
In	1	31
SPH	1100	2012
SPL	0	32
P	20	38
I	120	12
D	30	30

The P, I, D parameters may be altered through auto tuning (**refer to Section “Auto Tuning the UP150 Controller” Chapter “UP150 Controller Operation”).**

Communication Option

The Communication Option enables digital communication between the UP150 controller and a PC. It is a factory-installed temperature controller and cable assembly using an RS-485 connection through a DB9 cable connector at the rear of cabinet.

This option requires a separate option/accessory with the necessary cable and diagnostic software to set up and check the connections between the unit and the PC. Follow the steps below to make the cable connections and to check the data transfer. If you have purchased the "SpecView Plus Communication Software" with the copy protection key, refer to the SpecView instructions in parallel with this setup outline.

Cable Installation

1. To install the 25-foot external cable, disconnect the electrical power from both the unit and PC.
2. Connect the cable end with a black housing to the 9-pin port on the rear of the Thermo Fisher Scientific unit.
3. Connect the other cable end with the RS-232/485 Convener to the COM 1 Port (or other COM port of your choice) on the rear of the PC.
4. If you have purchased the SpecView Plus Communication Software with the copy protection key. Install this key in the USB port. It may be necessary to locate the key between a cable and the parallel port.
5. Apply electrical power to the unit and the PC.

UT150 Communications Setup Parameters

Table 7 shows the default values for UP150 or UP550 Communications Setup Parameters. To access these parameters:

1. Hold the SET/ENT button for three second to display the Operating Parameters. Press and release the SET/ENT button to display the "LoC" parameter. Assure lower value at "ø". Press the down arrow to show "-1" in the lower display and press SET/ENT to acknowledge and enter the Setup Parameters menu.

2. Press and release the SET/ENT button to access the six parameters specific to the communications option.

Table 7. UP150 Communications Parameters

Para-meter Code	Factory Set Value	Description
Communications Setup Parameters		
PSL	0	Protocol selection
Adr	1	Controller address
bPs	9600	Baud rate
Pr1	EVN	Parity (even)
StP	1	Stop bit
dLn	8	Data length

Software Installation

1. Load the SpecView software onto the PC hard drive, using the disks provided.
2. Run the software. (If you have purchased the SpecView Plus Communication Software with the copy protection key. Skip step 3.)
3. If you do not have a copy protection key, a "SpecView" window opens with the message, "Problem with Dongle: 'Dongle' (Copy Protection Key) not detected on parallel port" Click the OK button to acknowledge the message. Without the copy protection key, this diagnostic/sampler software has a 20-minute time limit on each run. If the message "demo version of SpecView has stopped communicating - values are frozen" appears before the communication diagnostics are finished, close the software and reopen it for another 20-minute segment.
4. When the "Configuration Found.." windows opens, click on the "Test Comms for New Config." Button.
5. The "The Input Required.." window then opens. Enter a new Config. Name (up to 8 characters with no spaces) or accept the "DEFAULT" name. Click OK.
6. The "Ports and Protocol" window opens next. On the "COM1:" line (if the COM 1 port in the serial port used to connect to the controller) select the pulldown menu from Highlight.
7. Select the pulldown menu from the Baud Rate column. Highlight "9600". Click on the "Start Scan" button.
8. The SpecView program scans all 99 possible controller addresses and places a representative "Instrument view" of the temperature controller on the PC

screen for each controller found connected to the PC. The factory-set addresses are 1, 2, 3. etc., depending on the number of controller's with communications in a single furnace. Additional units with communications will require the controller's address to be changed. **See Section “Address for multiplier controller” Chapter “Communication Option”-** for detailed instructions on configuring multiple controllers.

9. After the instrument scan it completed, a SpecView window appears with the message. "All channels scanned. Press OK to continue, or cancel to rescan". Press OK if all of the connected controllers are properly displayed. If no controls are displayed, check the "troubleshooting" section at the end of this setup.
10. To begin communication between the PC and the controller, click on the “Enter Runtime” button (an icon of a running figurine). This action will ask for a file name to save this display: use the given default or select another.
11. The "SpecView" window will be displayed, showing the current PV (process variable) and SP (set point). If the SpecView display of the controller shows X's, the communications connection or power to the control may have been interrupted.
12. On some controllers, the decimal point position has been changed from use Yokogawa factory default This will make the SpecView display differ from the controller If this is the case, follow the instructions in **Section “Decimal Point Adjustment”, Chapter “Communication”.**

Communications Test

When you have established a working communications link between the controller and PC, you should check the link by varying the target set point function:

1. Click on the arrows of the controller(s) shown in the SpecView window. This will open a keypad window where the set point can be changed.
2. Select a temperature set point a few degrees from the current temperature and press the "send" button. Verify that the controller display shows the setpoint change.
3. Select the original temperature set point through the keypad on the controller and observe the change on the PC display.
4. The controller parameters may be viewed through SpecView by clicking on the "PAR" button. A window opens that lists the controller parameters. Each parameter can be changed by selecting it and clicking on the "Alter" button. Select the "Close" button. Make no changes at this time.

This concludes the initial software diagnostics.

Troubleshooting

If your connection is not working properly, check the following conditions:

A. Verify complete and tight cable connections between the Thermo Fisher Scientific unit and the PC.

B. Verify that power has been supplied to the unit and temperature controller before starting the software program.

C. Verify the configuration values in the controller, listed in the Table 7. “UP150 Communication Parameters”.

D. Verify the values in the "Ports & Protocols" window (**See Step 6 in Section “Software Installation”).**

Decimal Point Adjustment

If the decimal point on the PC display of the controller does not match the controller display, you can make an adjustment to correct this:

1. From the Configuration Mode (available through the "file" drop down while in the Runtime Mode), select the "Variables List" icon, represented by a page with lines on it.
2. Select the controller model number and select "Properties" button. The "Add/Rename Instrument" box appears.
3. In the Address window highlight the middle digit (usually a 1) and change to "0" (zero).
4. Click the "Rename Only" button. Close the "Variables" box (click on "X" in corner of smaller box).
5. Select the "Enter Runtime" icon to see the results of the change.

Addresses for Multiple Controllers

When more than one controller has the same communication address, alternative addresses need to be set up in the individual controllers. Addresses 1 through 99 can be selected on the same communication link to each PC COM port.

1. Determine a unique address for each temperature controller equipped with the communications option.
2. On the UP150 controller, access the Operating Parameters menu by pressing and holding SET/ENT for 3 seconds.
3. Press and release SET/ENT repeatedly until the upper display reads LoC.
4. Press ▽ until the displayed value of LoC is -1; then press SET/ENT to access the Setup Parameters menu.

5. Press and release the SET/ENT button to access the six parameters specific to the communications option. Compare the displayed values to those in Table 7. “UP150 Communications Parameters” Make adjustments as needed.
6. Press and hold SET/ENT for 3 seconds to exit the Setup Parameters Menu.

Maintenance

		CAUTION Maintenance should only be performed by trained personnel.

		WARNING Disconnect furnace from main power before attempting any maintenance to furnace or its controls.

		WARNING When installing, Maintaining, or removing the refractory insulation, the following precautions will minimize airborne dust and ceramic fiber: • Keep personnel not involved in maintenance out of the area. • Use a good vacuum to clean area and equipment. Do not use compressed air. • Use NIOSH high efficiently respirator (3M #8710 or equivalent). • Wear long sleeve clothing, gloves, hat, and eye protection to minimize skin and eye contact. Do not wear contact lenses. • Thoroughly wash self after work is complete. Launder work clothing separate from other clothes and thoroughly clean laundering equipment after use. If clothing contains a large amount of dust and/or ceramic fiber, dispose of rather than clean. • Promptly place used ceramic fiber parts and dust in plastic bags and dispose of properly.

For replacement parts specifications, refer to **Table 7. “Replacement Parts” Chapter “Replacement Parts”.** For wiring schematics, refer to **Section “Wiring Diagram”.**

Door Seal Adjustment (Refer to Figure11 on Page 8-7 in this manual)

To adjust the door seal:

1. Door assemblies have hex nuts attaching the insulation frame to the outer door frame. Loosen the appropriate nuts and move the door insulation frame to improve the door seal.
2. Recheck the door seal, following the instructions in **Section “Ramp to 1000 °C and operate for two hours” Chapter “Start Up”.**
3. If a gap is detected only in the center top edge of the door seal, then the top corners of the sealing surface of the door may be sanded to lessen the center gap.
4. After each adjustment recheck the door seal.
   The door seal has been adjusted properly if there is no heat loss when operating the furnace up to 500 °C.

Thermocouple Replacement

		WARNING Disconnect furnace from main power before attempting any maintenance to furnace or its controls.

		NOTE For optimal performance, the thermocouple should be replaced once a year. In some situations a more frequent replacement schedule is warranted. “b.o” on the controller display indicates a broken thermocouple.

Refer to **Figure 9. “Thermocouple replacement”** as you perform the following procedure:

1. Remove any atmosphere piping connected to the atmosphere pipe (item #2 in Figure 9).
2. Remove the two screws from the atmosphere pipe. Pull the atmosphere pipe straight out of the furnace.

		CAUTION Failure to pull the atmosphere pipe straight out of the furnace will result in damage to the atmosphere pipe or the heating unit.

3. Remove the screws from rear panel comers. Remove the rear panel (item # 1 in Figure 9).
4. Note polarity and wire location. Loosen the terminal screws and remove thermocouple lead wires.
5. Remove thermocouple mounting screws.
6. Slide out head and old thermocouple (item #3 in Figure 9).
7. Replace the thermocouple and connect new wires. Red is always negative.See Figure 2. Thermocouple.
8. Replace the furnace rear panel.
9. Replace the atmosphere pipe.

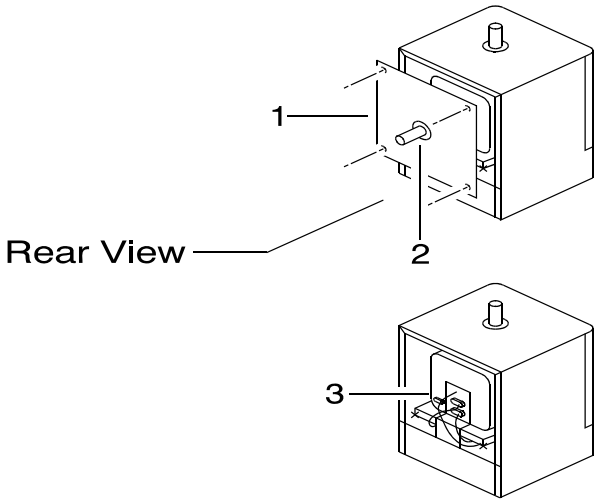

Figure 9. Thermocouple Replacement.

Solid-State Relay Replacement

		WARNING Disconnect furnace from main power before attempting any maintenance to furnace or its controls.

Refer to the **Chapter "Troubleshooting"** for power relay testing. If the power relay is inoperable, complete the following steps to replace the relay (refer to Figure 10):

1. Remove the screws located on the left and right sides of the control panel (item #1 in Figure 10).
2. Slide the panel assembly away from the unit to expose components.
3. Locate the solid state power relay on the component tray (item #2 in Figure 10).
4. Note the terminal connections of the relay wires and label them for reattachment. Remove the wires from the terminals of the relay.
5. Remove the mounting screws from the relay.
6. Replace the relay and reconnect the wires.
7. Reassemble the unit.

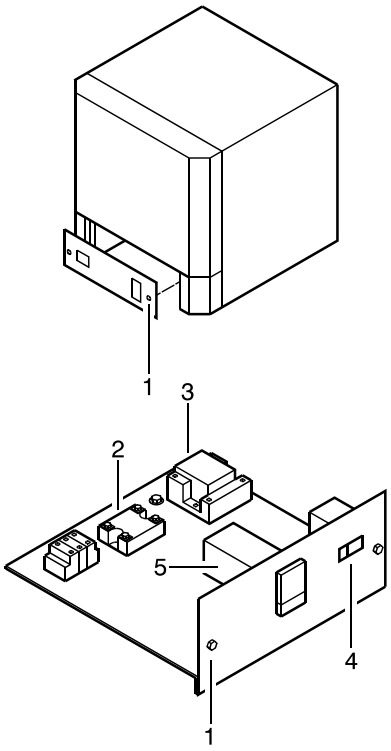

Figure 10. Solid Relay Replacement.

Power Relay Replacement

		WARNING Disconnect furnace from main power before attempting any maintenance to furnace or its controls.

Refer to the **section "Troubleshooting"** for power relay testing. If the power relay is inoperable, complete the following steps to replace the relay (refer to Figure 10):

1. Remove the screws located on the left and right sides of the control panel (item #1 in Figure 10).
2. Slide the panel assembly away from the unit to expose components.
3. Locate the power relay on the component tray (item #3 in Figure 10).
4. Note the terminal connections of the relay wires and label them for reattachment. Remove the wires from the terminals of the relay.
5. Remove the mounting screws from the relay.
6. Replace the relay and reconnect the wires.
7. Reassemble the unit.

Temperature Controller Replacement

		WARNING Disconnect furnace from main power before attempting any maintenance to furnace or its controls.

To replace the entire controller, complete the following steps (refer to Figure 10);

1. Disconnect the main power and switch the circuit breaker (#4 in Figure 10) to the OFF position.
2. Remove the two sheet metal screws located on each side of the furnace near the lower front (#1 in Figure 10). Pull the control panel forward to access the controller (#5 in Figure 10).
3. Note the terminal connections of the wires and label them for reattachment. Remove power input and output wires from the back of the controller. Observe polarity for the thermocouple lead wire. Red is always negative. Refer to Figure "Wiring Diagram" for additional wiring information.

4. Remove the retaining clamp.
5. Pull the controller out through the front of the control panel.
6. Install the replacement instrument by reversing the above procedure.

Door Insulation Replacement

		WARNING When installing, maintaining, or removing the ceramic fiber insulation, the following precautions will minimize airborne dust and fiber: • Keep personnel not involved in the installation out of the area. • Use a good vacuum to clean area and equipment. Use a dust suppressant if sweeping is necessary. Do not use compressed air. • Use a disposable mask suitable for nuisance dust. • Wear long sleeve clothing, gloves, hat, and eye protection to minimize skin and eye contact. Do not wear contact lenses. • Thoroughly wash self after work is complete. • Launder work clothing separate from other clothes and thoroughly clean laundering equipment after use, if clothing contains a large amount of dust and/or fiber, dispose of rather than clean. • Promptly place used ceramic fiber parts and dust in plastic bags and dispose of properly.

To replace the door insulation, complete the following steps (**refer to Figure 11 "Door insulation replacement"**);

1. Open the door completely.
2. Loosen the hex nuts at the brackets.
3. Pull out door insulation plug and frame from door.
4. Remove brackets at the top and bottom of insulation frame.
5. Replace the insulation.Install top and bottom brackets on to insulation frame.
6. Install the new door insulation plug. Frame into door, assuring the greater angled surface at top. See Figure 11.
7. Tighten Nuts.

8. Adjust per “Door Seal Adjustment” section.

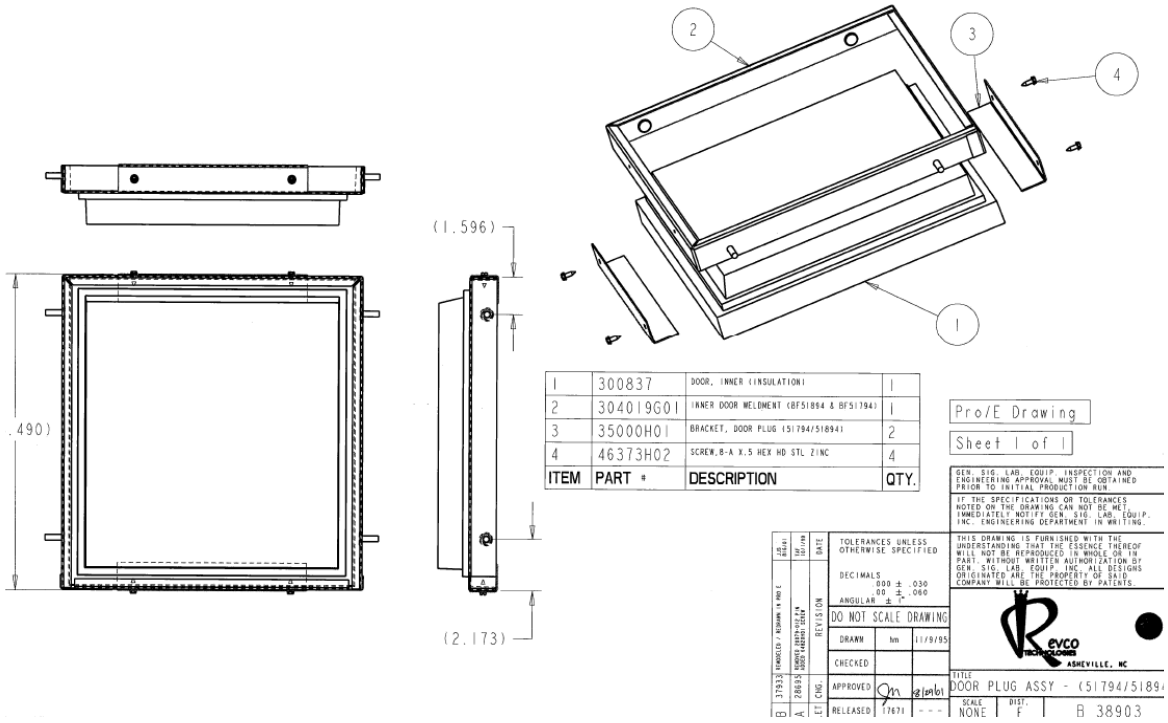

Figure 11. Door Insulation and Frame assembly

Heating Unit Replacement

		WARNING Disconnect furnace from main power before attempting any maintenance to furnace or its controls.

		CAUTION This product contains ceramic fiber or other refractories which can result in the following: • May be irritating to skin, eyes, and respiratory tract. • May be harmful if inhaled. • May contain or form cristobalite (crystalline silica) with use at high temperature (above 871 °C) which can cause severe respiratory disease. • Possible cancer hazard based on tests with laboratory animals. Animal studies to date are Inconclusive. No human exposure studies with this product have been reported.

To replace the heating unit, complete the following steps (**refer to Figure 12 "Heating unit replacement"):**

1. Remove any atmosphere piping connected to the atmosphere pipe (item #2 in Figure 12).
2. Remove the two screws from the atmosphere pipe. Pull the atmosphere pipe straight out of the furnace.

		CAUTION Failure to pull the atmosphere pipe straight out of the furnace will result in damage to the atmosphere pipe or the heating unit

3. Remove the screws from comers of the rear panel (#1 in Figure 12).
4. Remove the rear panel to expose the heating unit assembly.

5. Remove the two screws from the exhaust vent. Pull the exhaust vent straight up and out of the furnace.
6. Remove the six corner screws from the shell (#3 in Figure 12).
7. Lift the shell away from the base of the cabinet to expose the entire heating unit
8. Note the terminal connections of the element wires and label them for reattachment. Loosen the terminal nuts and remove the element wires (#4 in Figure 12).
9. Loosen the thermocouple wire terminal screws, remove wires. Remove mounting screws and slide the thermocouple assembly out of furnace (#5 in Figure 12).
10. Remove screws for terminal mount bracket. Remove terminal mount bracket (# 6 in Figure 12).
11. Unhook the springs and bands from the base of the chamber support plate
12. Install springs and bands.Make alignment of the insulation and cabinet front frame using rear bracket adjustment to the Chamber Support Bracket. Install shell and terminal mount bracket. Verify alignment of chamber opening and door insulation.
13. Replace the heating unit.
14. Carefully make the necessary holes for exhaust and atmosphere ports and thermocouple with a hand-turned drill bit or a small cutting tool.
15. Reassemble the furnace, including thermocouple, wire connections, ports and covers.
16. Check and adjust the door seal, referring to **Chapter "Start Up" Section "Door seal check" and Section "Door seal adjustment"**.

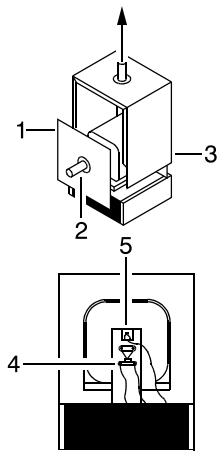

Figure 12. Heating Unit Replacement

1100 C HEATER / CHAMBER REPLACEMENT INSTRUCTIONS

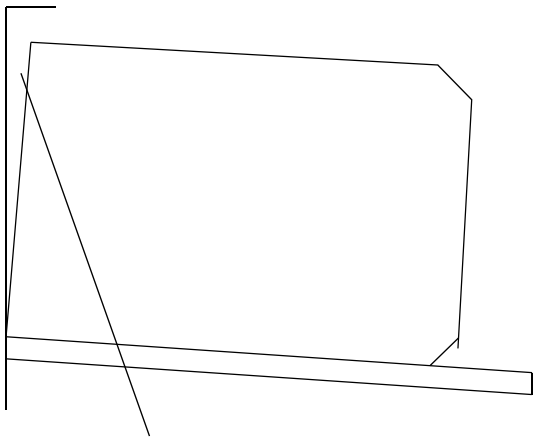

Illustration showing too much gap between top front edge of chamber and front plate of furnace chassis. Adjust platform height with front bottom of chamber flush with front panel of furnace chassis.

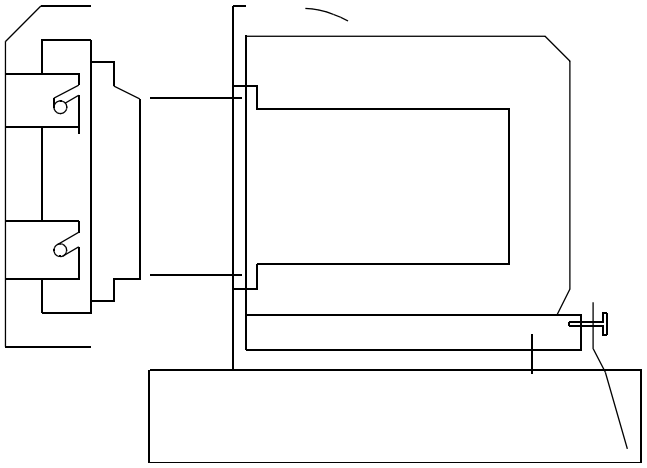

Figure 13. Alignment of Insulation and Cabinet Front Frame

Troubleshooting

		DANGER Troubleshooting procedures involve working with high voltages which can cause injury or death. Troubleshooting should only be performed by trained personnel. This section is a guide to troubleshooting controller and furnace problem.

Table 8. UP150 Controller Troubleshooting

Problem	Probable Cause	Solution
Controller reads P.Er.	Abnormal parameter value.	Check controller parameter settings and reset to proper values.
Controller reads b.o.	Input burnout.	Check the sensor wiring, replace sensor if necessary.
Controller reads ooo	PV exceeds effective range.	Check the input type and range settings and correct them.
Controller reads UUU	PV is below effective range.	Check the input type and range settings and correct them.
Controller reads Err	Probable hardware failure.	Call Service for controller repair.
The controller displays do not illuminate	The furnace is not connected to the power supply.	Check furnace connection to power source.
	Main switch or Controller is defective.	Replace power switch or controller.

Table 9. Furnace Troubleshooting.

Problem	Solution
Furnace temperature runs away.	Check Solid-State relay: 1. Disconnect controller single to solid state relay. 2. Connect power to furnace. If the unit heats, replace the solid-state relay.
Furnace does not heat.	Front panel red indicator light is on: 1. If the controller run or local light is off, check that the setpoint temperature is higher than the furnace display temperature. 2. If the controller run or local light is on, disconnect power from the furnace and check the heating element for continuity. 3. Check Controller Configuration. 4. Check signal voltage to both relays and high voltage output from relays.
	Front panel red indicator light is off: 1. Check that the power switch is on. 2. Check that the indicator lights on the controller display are on. 3. Check that the furnace door is fully closed. 4. Check that the door interrupt switch is engaged when the furnace door is fully closed. 5. Check the electrical wires for visible damage. 6. Replace the electrical wires if necessary. 7. Check that the Alarm Setpoint on the controller. Check that the Alarm Setpoint on the controller is set higher than the operating temperature (**refer to** Section "Setting the high temperature alarm setpoint").

Wiring Diagram

The following pages contain the wiring schematics for the BF51800 series furnaces.

Model BF51828

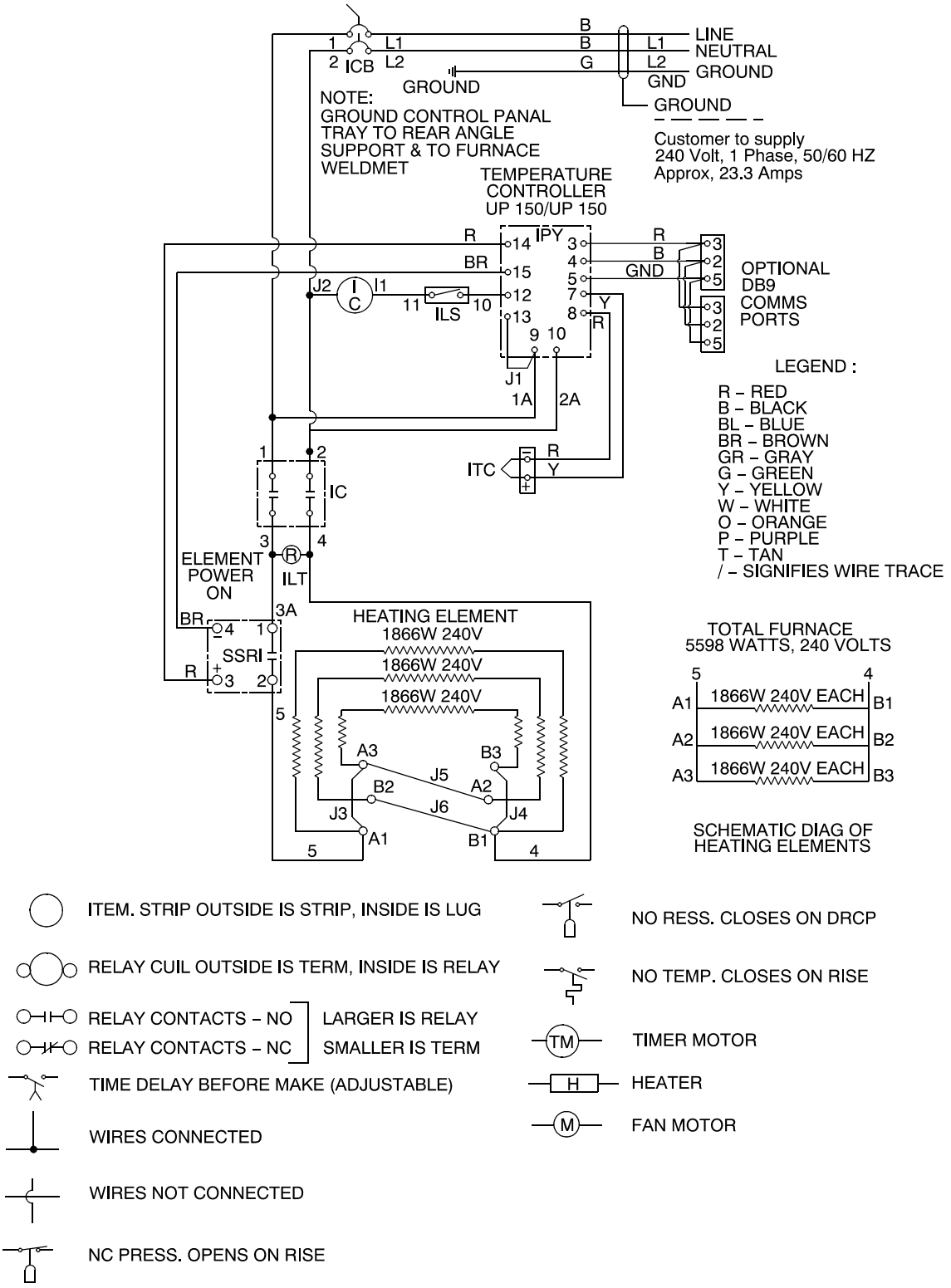

Figure 14. Wiring Diagram (Sheet 1of 3)

Models BF51848 and BF51866

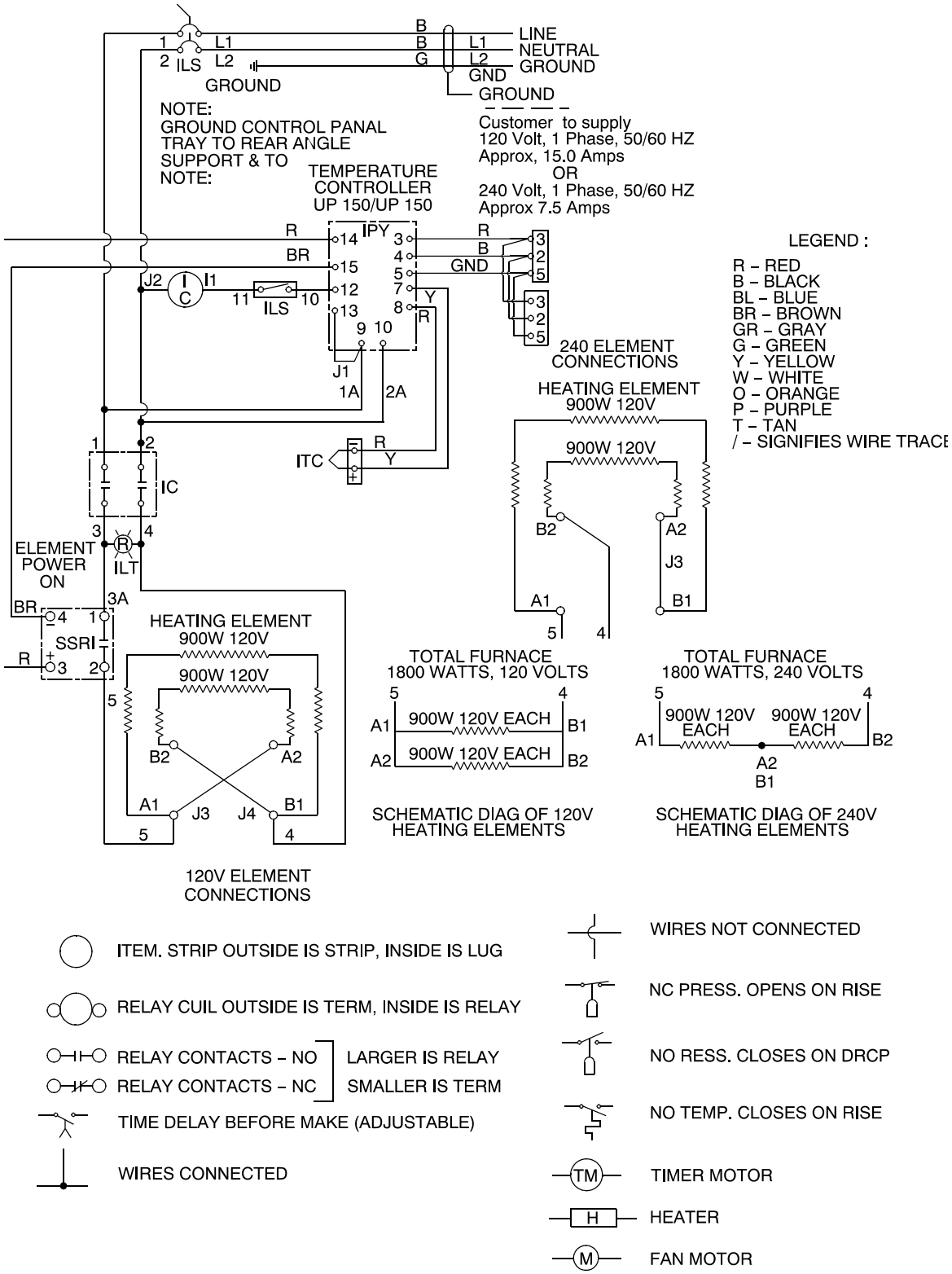

Figure 14. Wiring Diagram (Sheet 2 of 3)

Model BF51894

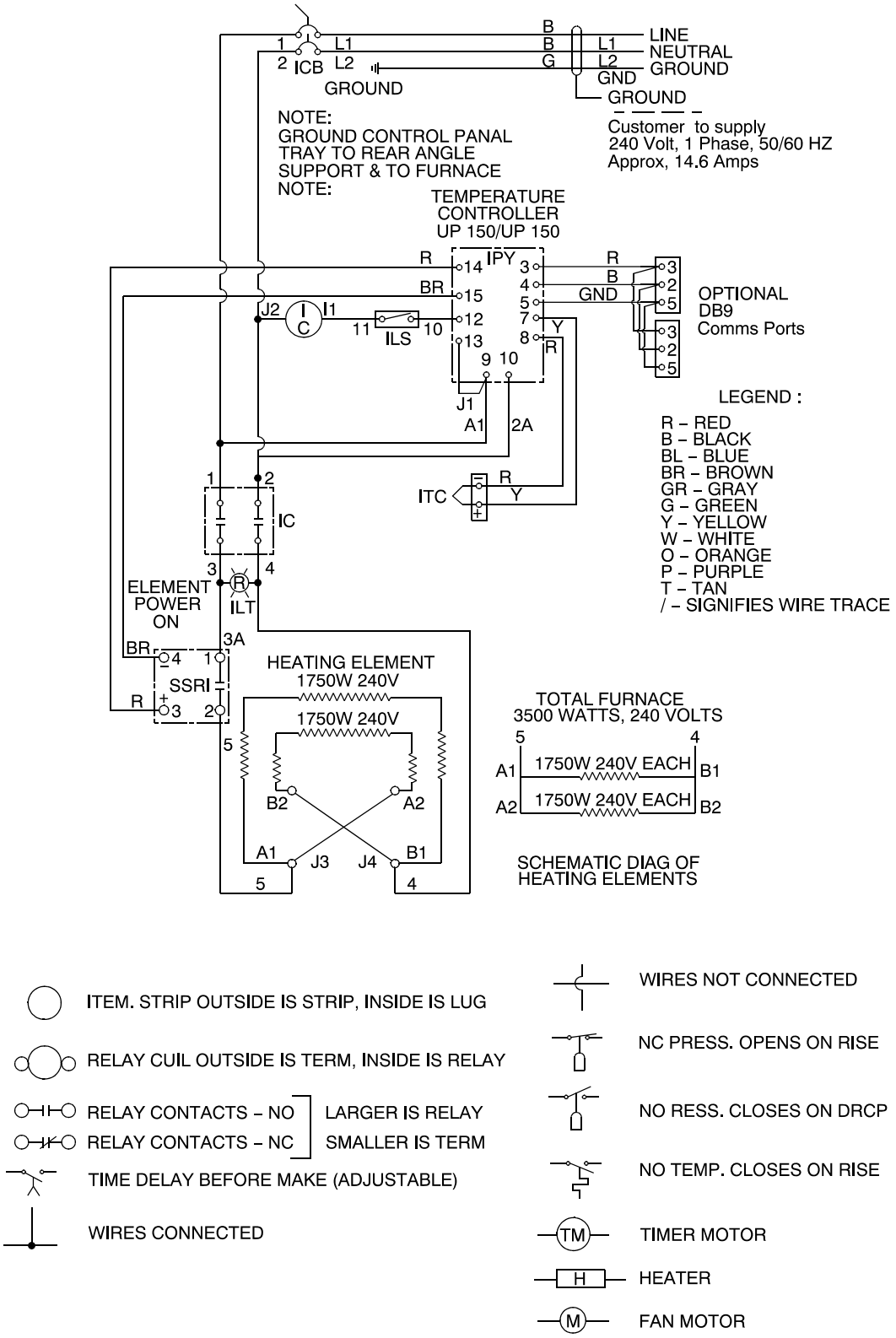

Figure 14. Wiring Diagram (Sheet 3 of 3)

Replacement Parts

Table 10. Replacement Parts

Model BF51828C, Box Furnaces,1100 °C

Description	Item	BF51828C-1
Heater-Chamber Assembly	301230H01	1
Terminal block, element	7218-2054-00A S	3
Bracket, terminal block	35024H01	1
Hearth Plate	7011-2066-00A	1
Exhaust Port Cover	7221-2063-00A	1
Gas Inlet Assembly	300253G02 S	1
Thermocouple Assembly	7299-1186-00A S	1
T/C Leadwire	33940-002	8 feet
Wire Harness	38850G04	1
Main Circuit Breaker	302795H05	1
Contactor	16868	1
Solid State Relay.	102460	1
Red Pilot Light	33002-001	1
Controller	303115H19	1
Door Insulation Assembly	304050H01	1
Door Switch	76887H01	1
Door Catch/Latch	16042	2
Operational Manual	312060H01	1
Wiring Diagram	304232I03	1

Model BF51894C, Box Furnaces,1100 °C

Description	Item	BF51894C-1
Heater-Chamber Assembly	310768H01	1
Terminal block, element	7218-2054-00A S	2
Hearth Plate	7011-2051-00A	1
Exhaust Port Cover	7221-2063-00A	1
Gas Inlet Assembly	300253G02 S	1
Thermocouple Assembly	7299-1186-00A S	1
Power Cord	48951H04	1
Main Circuit Breaker	302795H03	1
Contactor	16934	1
Solid State Relay.	102460	1
Controller	303115H19 S	1
Door Insulation Assembly	300837H01	1
Door Switch	76887H01	1
Door Catch/Latch	16042	1

Model BF51866 Series Box Furnaces,1100 °C

Description	Item	BF51866A-1	BF51866C-1
Heater-Chamber Assembly	310767H01	1	1
Terminal block, element	7218-2054-00A S	2	2
Description	**Item**	**BF51866A-1**	**BF51866C-1**
Hearth Plate	7011-2022-00C	1	1
Exhaust Port Cover	7221-2063-00A	1	1
Gas Inlet Assembly	300253G02 S	1	1
Thermocouple Assem-bly	7299-1186-00E S	1	1

T/C-Leadwire	33940-002	6 feet	6 feet
Power Cord,120 volts	48951H02	1	0
Power Cord,240 volts	48951H03	0	1
Main Circuit Breaker	302795H03	1	1
Contactor,120Volts	16869	1	0
Contactor,240 Volts	16868	0	1
Solid State Relay	102460	1	1
Controller	303115H19 S	1	1
Door Insulation Assem-bly	302025H01	1	1
Door Switch	76887H01	1	1
Door Catch/Latch	16042	1	1

Model BF51848 Series Box Furnaces,1100 °C

Description	Item	BF51848A-1	BF51848C-1
Heater-Chamber Assem-bly	310766H01	1	1
Terminal block, element	7218-2054-00A S	2	2
Hearth Plate	7011-2022-00B	1	1
Exhaust Port Cover	7221-2063-00A	1	1
Gas Inlet Assembly	300253G04 S	1	1
Thermocouple Assembly	7299-1186-00E S	1	1
T/C-Leadwire	33940-002	4 feet	4 feet
Power Cord,120 volts	48951H02	1	0
Power Cord,240 volts	48951H03	0	1
Main Circuit Breaker	302795H03	1	1
Contactor,120Volts	16869	1	0
Contactor,240 Volts	16934	0	1
Solid State Relay	102460	1	1
Controller	303115H19 S	1	1

Door Insulation Assembly	3040501H01	1	1
Door Switch	76887H01	1	1
Door Catch/Latch	16042	1	1

Error Codes

This chapter is not applicable.

WEEE Compliance

Great Britain

This product is required to comply with the European Union's Waste Electrical & Electronic Equipment (WEEE) Directive 2002/96EC. It is marked with the following symbol. Thermo Scientific has contracted with one or more recycling disposed companies in each EU Member State, and this product should be disposed of or recycled through them. Further information on Thermo Scientific's compliance with these Directives, the recyclers in your country, and information on Thermo Scientific products which may assist the detection of substances subject to the RoHS Directive are available at www.thermo.com/WEEERoHS

Deutschland

Dieses Produkt muss die EU Waste Electrical & Electronic Equipment (WEEE) Richtlinie 2002/96EC erfullen. Das Produkt ist durch folgendes Symbol gekennzeichnet. Thermo Scientific hat Vereinbarungen getroffen mit Venvertungs-IEntsorgungsanlagen in allen EU-Mitgliederstaaten und dieses Produkt muss durch diese Firmen wide~enveteot der entsorgt werden. Mehr Informationen iiber die Einhaltung dieser Anweisungen durch Thermo Scientific, die Verwerter und Hinweise die Ihnen niitzlich sein kijnnen, die Thermo Scientific Produkte zu identizfizieren, die unter diese RoHS Anweisung fillen, finden Sie unter www.thermo.com/WEEERoHS

Italia

Questo prodotto deve risponderealla direttiva dell'unione Europea 2002/96EC in merito ai Rifiuti degli Apparecchi Elettrici ed Elearonici (WEEE). k marcato col seguente simbolo. Thermo Scientific ha stipulate contratti con una o diverse societi di ricicliggio/smdtimento in ognuno degli Stati Membri Europei. Questo prodotto verri smaltito o ricidato tramite queste medesirne. Ulteriori informazioni sulla conformi& di Thermo Scientific con queste Direttive, l'elenm dele dine di ricidaggio nel Vostro paese. e informazioni sui prodotti Thermo Scientific che possono essere utili dla rilevazione di sostanze soggette- alla Direttiva RoHS sono disponibili www.thermo.com/WEEERoHS

France

Ce pmduit doit &re conforme 1 la directive europtenne (2002/96EC) des Dkchets d'Equipements Electriques et Electroniques (DEEE). I1 est merqui par le symbole suivant. Thermo Scientific s'est associi avec une ou plusieurs compagnies de recyclage dans chaque ttat membre de l'union europtenne et ce produit devrait &re collect6 ou recyclt par celles-ci. Davantage &informations sur la conformitt de Thermo Scientific 1 ces directives, les recycleurs dans votre pays et les informations sur les produits Thermo Scientific qui peuvent aider le dttection des substances sujettes i la directive RoHS sont dispoiblseusr www.thermo.com/WEEERoHS

Spare Parts and Accessories

This chapter is not applicable.

Device Log

Box Furnaces		**Part number:**	
Serial number:		**Service number:**	
Location		**Operator's note:**	

Work carried out	**Notes**	**Date**	**Signed:**

Contact

Overview of Thermo Fisher International Sales Organization

Postal address in Germany
Thermo Electron LED GmbH
Robert-Bosch-Straße 1
D - 63505 Langenselbold

Enquiries from Germany:

Phone	
Sales	0800 1 536376
Service	0800 1 112110
Fax	
Sales/Service	0800 1 112114
Email	info.labequipment.de@thermofisher.com

Enquiries from Europe, Middle East and Africa:

Phone.	+ 49 (0) 6184 / 90-6940
Fax	+ 49 (0) 6184 / 90-6772
E-Mail	info.labequipment.de@thermofisher.com

Postal address USA:
Thermo Scientific
275 Aiken Road
Asheville, NC 28804
USA

Enquiries from North America:

Phone	+1 866-984-3766
Fax	+1 888-618-2676
E-Mail	info.labequipment@thermofisher.com

Enquiries from Latin America:

Phone	+1 828-658 2711
Fax	+1 828-645 9466
E-Mail	info.labequipment@thermofisher.com

Enquiries from Asia Pacific:

Phone	+852-2711 3910
Fax	+852-2711 3858
E-Mail	info.labequipment@thermofisher.com